harman/kardon

AVR745

A/V DOLBY DIGITAL RECEIVER

SERVICE MANUAL

CONTENTS

ESD WARNING……..……2
LEAKAGE TESTING……..……...3
BASIC SPECIFICATIONS……..4
PACKAGE……..……..……...5
PACKAGE PARTS LIST…..……6
FRONT PANEL CONTROLS……..……7
REAR PANEL CONNECTIONS……..……10
REMOTE CONTROL FUNCTIONS…….13
INSTALLATION/CONNECTIONS……17
OPERATION……21
TROUBLESHOOTING GUIDE…..……30
PROCESSOR RESET……..30
UNIT EXPLODED VIEW……31
EXPLODED VIEW PARTS LIST……32
IDLE CURRENT ADJUST……...34
BLOCK DIAGRAM(S)……37
SEMICONDUCTOR PINOUTS……40
PCB DRAWINGS……..……91
ELECTRICAL PARTS LIST……104
SCHEMATICS……..……129
WIRING DIAGRAM……..146

harman/kardon, Inc.

250 Crossways Park Dr.

Woodbury, New York 11797

Rev1 – 4/2007

ELECTROSTATICALLY SENSITIVE (ES) DEVICES

Some semiconductor (solid state) devices can be damaged easily by static electricity. Such components commonly are called Electrostatically Sensitive (ES) Devices. Examples of typical ES devices are integrated circuits and some field effect transistors and semiconductor "chip" components.

The following techniques should be used to help reduce the incidence of component damage caused by static electricity.

1. Immediately before handling any semiconductor component or semiconductor-equipped assembly, drain off any electrostatic charge on your body by touching a known earth ground. Alternatively, obtain and wear a commercially available discharging wrist strap device, which should be removed for potential shock reasons prior to applying power to the unit under test.
2. After removing an electrical assembly equipped with ES devices, place the assembly on a conductive surface such as aluminum foil, to prevent electrostatic charge build-up or exposure of the assembly.
3. Use only a grounded-tip soldering iron to solder or unsolder ES devices.
4. Use only an anti-static solder removal device. Some solder removal devices not classified as "anti-static" can generate electrical charges sufficient to damage ES devices.
5. Do not use freon-propelled chemicals. These can generate electrical change sufficient to damage ES devices.
6. Do not remove a replacement ES device from its protective package until immediately before you are ready to install it. (Most replacement ES devices are packaged with leads electrically shorted together by conductive foam, aluminum foil or comparable conductive material.)
7. Immediately before removing the protective material from the leads of a replacement ES device, touch the protective material to the chassis or circuit assembly into which the device will be installed.

   CAUTION : Be sure no power is applied to the chassis or circuit, and observe all other safety precautions.
8. Minimize bodily motions when handling unpackaged replacement ES devices. (Otherwise harmless motion such as the brushing together or your clothes fabric or the lifting of your foot from a carpeted floor can generate static electricity sufficient to damage an ES devices.

PRODUCT SAFETY NOTICE

Each precaution in this manual should be followed during servicing.

Components identified with the IEC symbol ⚠ in the parts list are special significance to safety. When replacing a component identified with ⚠, use only the replacement parts designated, or parts with the same ratings or resistance, wattage, or voltage that are designated in the parts list in this manual. Leakage-current or resistance measurements must be made to determine that exposed parts are acceptably insulated from the supply circuit before retuming the product to the customer.

SAFETY PRECAUTIONS

The following check should be performed for the continued protection of the customer and service technician.

LEAKAGE CURRENT CHECK

Measure leakage current to a known earth ground (water pipe, conduit, etc.) by connecting a leakage current tester between the earth ground and all exposed metal parts of the appliance (input/output terminals, screwheads, metal overlays, control shaft, etc.). Plug the AC line cord of the appliance directly into a 120V AC 60Hz outlet and turn the AC power switch on. Any current measured must not exceed o.5mA.

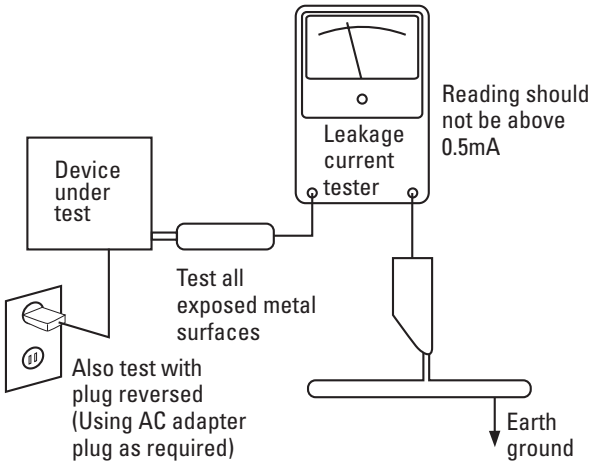

AC Leakage Test

ANY MEASUREMENTS NOT WITHIN THE LIMITS OUTLINED ABOVE ARE INDICATIVE OF A POTENTIAL SHOCK HAZARD AND MUST BE CORRECTED BEFORE RETURNING THE APPLIANCE TO THE CUSTOMER.

AVR 745 TECHNICAL SPECIFICATIONS

Audio Section

Stereo Mode
Continuous Average Power (FTC)

100 Watts per channel, 20Hz–20kHz,
@ <0.07% THD, both channels driven into 8 ohms

Seven-Channel Surround Modes
Power per Individual Channel

Front L&R channels:
85 Watts per channel
@ <0.07% THD, 20Hz–20kHz into 8 ohms

Center channel:
85 Watts @ <0.07% THD, 20Hz–20kHz into 8 ohms

Surround (L & R Side, L & R back) channels:
85 Watts per channel
@ <0.07% THD, 20Hz–20kHz into 8 ohms

Input Sensitivity/Impedance	
Linear (High-Level)	200mV/47k ohms
Signal-to-Noise Ratio (IHF-A)	100dB
Surround System Adjacent Channel Separation	
Pro Logic I/II	40dB
Dolby Digital (AC-3)	55dB
DTS	55dB
Frequency Response	
@ 1W (+0dB, –3dB)	10Hz – 130kHz
High Instantaneous Current Capability (HCC)	±60 Amps
Transient Intermodulation Distortion (TIM)	Unmeasurable
Slew Rate	40V/µsec

FM Tuner Section

Frequency Range	87.5–108.0MHz
Usable Sensitivity	IHF 1.3µV/13.2dBf
Signal-to-Noise Ratio	Mono/Stereo 70/68dB
Distortion	Mono/Stereo 0.2/0.3%
Stereo Separation	40dB @ 1kHz
Selectivity	±400kHz, 70dB
Image Rejection	80dB
IF Rejection	90dB

AM Tuner Section

Frequency Range	520–1720kHz
Signal-to-Noise Ratio	45dB
Usable Sensitivity	Loop 500µV
Distortion	1kHz, 50% Mod 0.8%
Selectivity	±10kHz, 30dB

Video Section

Television Format	NTSC
Input Level/Impedance	1V p-p/75 ohms
Output Level/Impedance	1V p-p/75 ohms
Video Frequency Response (Composite and S-Video)	10Hz–8MHz (–3dB)
Video Frequency Response (Component Video)	10Hz–100MHz (–3dB)
HDMI	Version 1.1

General

Power Requirement	AC 120V/60Hz
Power Consumption	120W at Power On, idle; 1,405W at rated power output (7 channels driven)

Dimensions	Product	Shipping
Width	17-5/16 inches (440mm)	20-1/16 inches (510mm)
Height	6-1/2 inches (165mm)	10 inches (254mm)
Depth	17-1/16 inches (435mm)	22-3/16 inches (565mm)
Weight	44 lb (19.9kg)	51 lb (23.1kg)

Depth measurement includes knobs, buttons and terminal connections.
Height measurement includes feet and chassis.

All features and specifications are subject to change without notice.
Harman Kardon, Harman International and Logic 7 are registered trademarks of Harman International Industries, Incorporated.
The Bridge™ and IllumiSet/EQ™ are trademarks of Harman International Industries, Incorporated.
Dolby, Pro Logic and the Double-D symbol are registered trademarks of Dolby Laboratories. Manufactured under license from Dolby Laboratories.
DTS, DTS Surround, DTS-ES, DTS 96/24 and DTS Neo:6 are registered trademarks of DTS, Inc.
A-BUS and A-BUS/*READY* are registered trademarks of Leisure Tech Electronics Pty Ltd Australia.
SACD is a trademark of Sony Corporation.
iPod is a registered trademark of Apple Computer, Inc.
DLP and Texas Instruments are trademarks of Texas Instruments.
Faroudja and DCDi by Faroudja are trademarks of Genesis Microchip, Inc.
HD-DVD is a trademark of the DVD Format/Logo Licensing Corporation (DVD FLLC).
HDMI, the HDMI logo and High-Definition Multimedia Interface are trademarks or registered trademarks of HDMI Licensing, LLC.
Microsoft, Windows and Windows Media are registered trademarks of Microsoft Corporation in the United States and other countries.
XM-Ready is a registered trademark of XM Satellite Radio, Inc.

Supplied Accessories

The AVR 745 is supplied with the following accessory items. Please note that they are packed in different boxes, so it is important to check each individual box before reporting missing items. If any item is missing, please contact Harman Kardon customer service at www.harmankardon.com.

- TC 30 remote control
- Battery for the TC 30
- USB cable for the TC 30
- TC 30 charging cradle
- Charger for the TC 30
- TC 30 software CD-ROM
- TC 30 installation guide
- ZR 10 remote control
- Two AAA batteries for ZR 10
- IllumiSet/EQ™ microphone
- Extender rod for microphone
- AM loop antenna
- FM wire antenna
- AC power cord

Please register your product on our Web site at www.harmankardon.com. NOTE: You'll need the serial number of your AVR. At the same time, you can choose to be notified about our new products and/or special promotions.

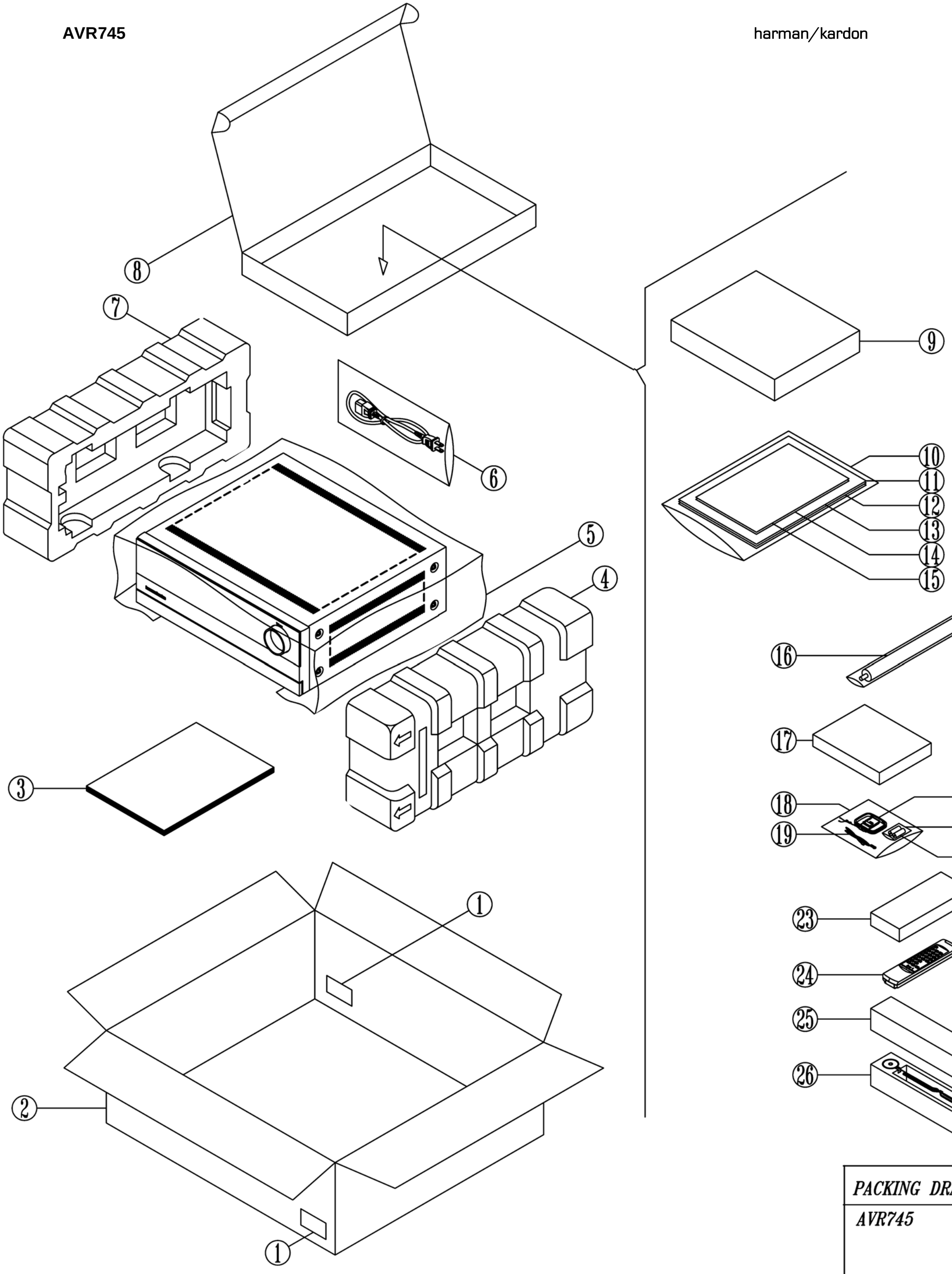

PACKING DRAWING

AVR745

	LEGEND FOR AVR745 PACKAGE PAGE		
AVR745 US Packing Part List			
Item #	**Part Number**	**Description**	**Qty**
1		LABEL BARCODE AVR745US	2
2	ZKD2704HA00-R	BOX CARTON AVR745US	1
3	ZKD2701HA00-R	OWNER'S MANUAL AVR745US	1
4	ZQD1201HAWH-R	CUSHION POLY EPS RIGHT	1
5		FILM SHEET PE 920 X 1000	1
6	H03-WAUSA2103BK-R	POWER CORD WS-004C+002E SJT#14*2C L=2M	1
7	ZQD1202HAWH-R	CUSHION POLY EPS LEFT	1
8	ZKD2802HA04-R	AVR745 TOTAL ACCESSORY BOX	1
9	H03-RYD2701HB00-R	REMOCON W/ ACCESSORY BOX AVR745US	1
10	ZBP00122051-R	BAG PE 330 X245 T0.05	1
11	ZKD2716HA00-R	QUICK SETUP GUIDE AVR745	1
12	ZKC1214HA00-R	LABEL SAFETY LEAFLET	1
13	ZKC1113HA00-R	CARD WARRANTY	1
14	ZKD1263HA00-R	BROCHURE AVR US	1
15	ZKC1263HA00-R-0	INSERT RS232 NOTE PAPER	1
16	H03-ZPD1212INBK-R	MICROPHONE ASSY EXTENSION PIECE	1
17		BOX ANTENNA	1
18	ZBP00161851-R	BAG PE 160X180MM	1
19	H03-WAB01200203-R	ANTENNA WIRE 75 T15011N-1	1
20	H03-ATALF039ABK-R	ANTENNA WIRE ANTENNA LOOP-300	1
21	ZBP00020350-R	POLYBAG BATTERY	1
22		BATTERY ALKALINE 1.5V AAA	2
23	ZKD2802HA03-R	BOXZONE I1 REMOTE CONTROLLER	1
24	H03-RYD2702HA00-R	REMOCON ZONE 2 AVR745	1
25	ZKD2802HA02-R	BOX MIC	1
26	H03-MCD12TWBKNN-R	MICROPHONE ASSY	1

FRONT-PANEL CONTROLS

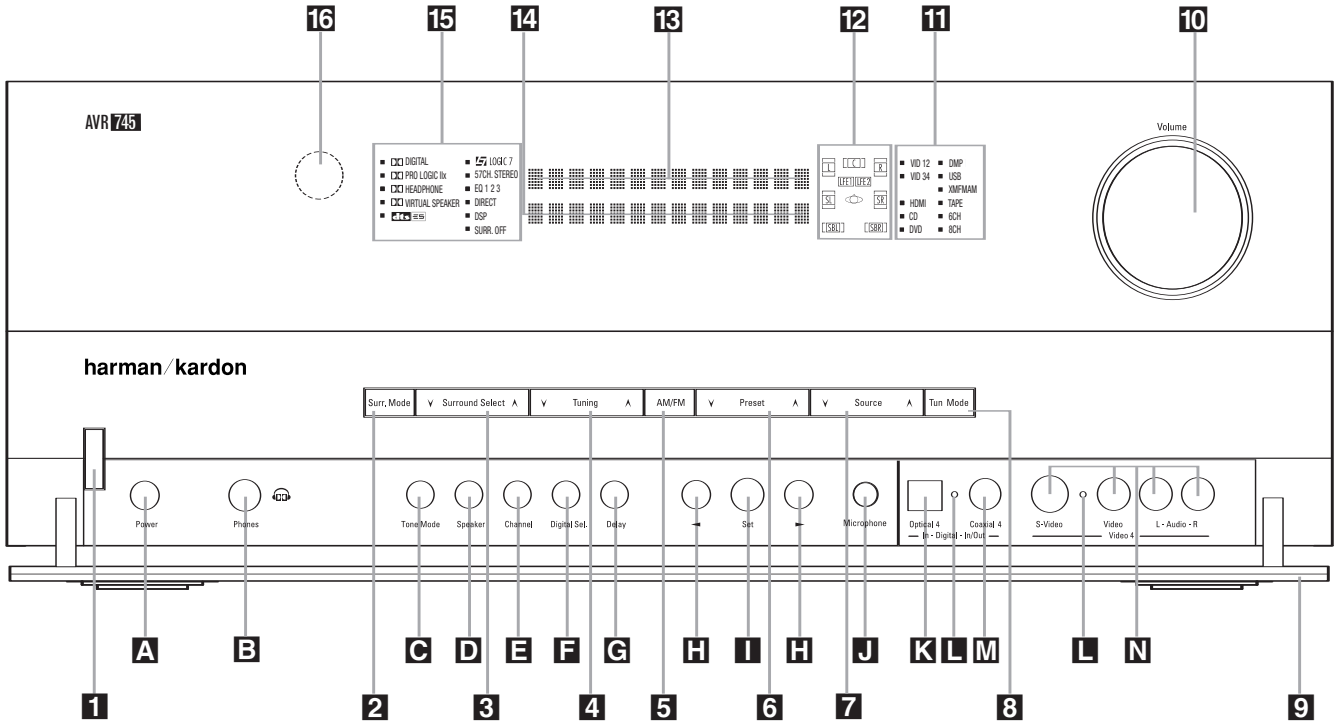

NOTE: To make it easier to follow the instructions that refer to this illustration, a larger copy may be downloaded from the Product Support section for this product at www.harmankardon.com.

The following controls and indicators are available on the AVR 745's front panel:

1 Standby/On Switch
2 Surround Mode Group Selector
3 Surround Mode Selector
4 Tuning Selector
5 Tuner Band Selector
6 Preset Station Selector
7 Input Source Selector
8 Tuning Mode Selector
9 Front-Panel Door
10 Volume Control
11 Input Indicators
12 Speaker/Channel Input Indicators
13 Upper Display Line
14 Lower Display Line
15 Surround Mode Indicators
16 Remote Sensor Window

The following controls and jacks are located behind the front-panel door. To open the door, place the edge of a finger on the left or right edge of the panel and gently swing the door down toward you.

A Main Power Switch
B Headphone Jack
C Tone Mode Button
D Speaker Selector Button
E Channel Adjust Selector
F Digital Input Selector
G Delay Adjust Selector
H ◀/▶ Buttons
I Set Button
J EzSet/EQ II Microphone Jack
K Optical 4 Digital Input
L Input/Output Status Indicators
M Coaxial 4 Digital Jack
N Video 4 Input/Output Jacks

1 Standby/On Switch: When the **Main Power Switch A** is "ON," press this button to turn on the AVR 745; press it again to turn the unit off. Note that the illumination surrounding the switch will turn blue when the unit is on, or in the Multiroom mode.

2 Surround Mode Group Selector: Press this button to select the top-level group of surround modes. Each press of the button will select one of the surround mode categories. Once the button is pressed so that the name of the desired surround mode category appears in the on-screen display and in the **Lower Display Line 14**, press the **Surround Mode Selector 3** to cycle through the individual modes available. For example, press this button to select Dolby modes, and then press the **Surround Mode Selector 3** to choose from the various mode options.

3 Surround Mode Selector: Press this button to select from among the available surround mode options for the surround mode category selected. The specific modes will vary based on the number of speakers available, the surround mode category and whether the input source is digital or analog. For example, press the **Surround Mode Group Selector 2** to select a category such as Dolby or Logic 7, and then press this button to see the specific mode choices that are available. For more information on mode selection, see pages 40 – 42.

FRONT-PANEL CONTROLS

4 Tuning Selector: Press the left side of the button to tune lower-frequency stations and the right side of the button to tune higher-frequency stations. When the tuner is in the MANUAL/MONO mode, each tap of the Selector will increase or decrease the frequency by one increment. When the tuner receives a signal strong enough for adequate reception, MANUAL TUNED will appear in the **Lower Display Line 14** and in the on-screen display. When the tuner is in the AUTO/STEREO mode, press the button once, and the tuner will scan for a station with acceptable signal strength. When the next higher- or lower-frequency station is tuned, the frequency scan will stop and the **Lower Display Line 14** and the on-screen display will indicate AUTO TUNED. When an FM stereo station is tuned, the display will read AUTO ST TUNED. See page 45 for more information on using the tuner. When an XM-Ready module is connected and activated, and when there is sufficient signal strength for the XM system to operate, pressing this button will change the XM Radio channel.

5 Tuner Band Selector: Pressing this button will automatically switch the AVR 745 to the Tuner mode. Pressing it again will select the AM or FM frequency band, or XM Radio. (See page 45 for more information on the tuner.)

6 Preset Station Selector: Press this button to scroll up or down through the list of stations that have been entered into the preset memory. (See page 46 for more information on tuner programming.)

7 Input Source Selector: Press this button to change the input by scrolling up or down through the list of input sources.

8 Tuning Mode Selector: Press this button to select Auto or Manual tuning. When the button is pressed so that AUTO/STEREO appears in the **Upper Display Line 13**, the tuner will search for the next station with an acceptable signal when the **Tuning Selector 4E** is pressed. When the button is pressed so that MANUAL/MONO appears in the **Upper Display Line 13**, each press of the **Tuning Selector 4E** will increase the frequency. (See pages 45–46 for more information on using the tuner.)

This button may also be used to switch between Stereo and Mono modes for FM radio reception. When weak reception is encountered, select the Manual/Mono tuning mode. Press and hold again to switch back to Stereo mode. (See pages 45–46 for more information on using the tuner.)

When an XM Connect & Play module is connected and activated, and when there is sufficient signal strength for the XM system to operate, this button has a different set of functions than when traditional AM or FM radio is in use. See page 46 for more information on XM Radio operation.

9 Front-Panel Door: To open the door so that the front-panel jacks and controls behind this door may be accessed, gently pull the door down and toward you, using either upper corner of the door.

10 Volume Control: Turn this knob clockwise to increase the volume, counterclockwise to decrease the volume. If the AVR 745 is muted, adjusting the volume control will automatically release the unit from the silenced condition.

11 Input Indicators: One of these indicators will light to identify the currently selected input. Note that the entire list will light briefly each time the unit is turned on as a test.

12 Speaker/Channel Input Indicators: These indicators are multipurpose, indicating both the speaker type selected for each channel and the incoming data-signal configuration. The left, center, right, right surround and left surround speaker indicators are composed of three boxes, while the subwoofer is indicated by one or two boxes. The center box lights when a "small" speaker is selected, and the two outer boxes light when "large" speakers are selected. When none of the boxes are lit for the center, surround or subwoofer channels, no speaker has been assigned that position. The letters inside each box display the active input channels. For standard analog inputs, only the L and R will light, indicating a stereo input. For a digital source, the indicators will light to display the channels being received at the digital input. When the letters flash, the digital input has been interrupted. (See page 44 for more information on the Channel Indicators.)

13 Upper Display Line: Depending on the unit's status, a variety of messages will appear here. In normal operation, this line will show the current input source and identify whether an analog or digital input is in use. When the tuner is selected as the input, this line will identify the station as AM or FM and show the frequency and preset number, if any.

When an XM Connect & Play module is connected and activated, and when there is sufficient signal strength for the XM system to operate, the XM channel number and signal strength will appear here.

14 Lower Display Line: Depending on the unit's status, a variety of messages will appear here. In normal operation, the current surround mode will appear on this line. When an XM-Ready module is connected and activated, and when there is sufficient signal strength for the XM system to operate, a variety of messages and information, including the XM channel title name, the current artist and track title, the XM Radio channel category and, when available, local traffic and weather information, will appear here.

15 Surround Mode Indicators: One of these indicators will light to show the surround mode in use. Depending on the specific combination of input sources and surround mode selected, more than one indicator may light. (See page 43 for more information.)

16 Remote Sensor Window: The sensor behind this window receives infrared signals from the remote control. Aim the remote at this area and do not block or cover it unless an external remote sensor is installed.

FRONT-PANEL CONTROLS

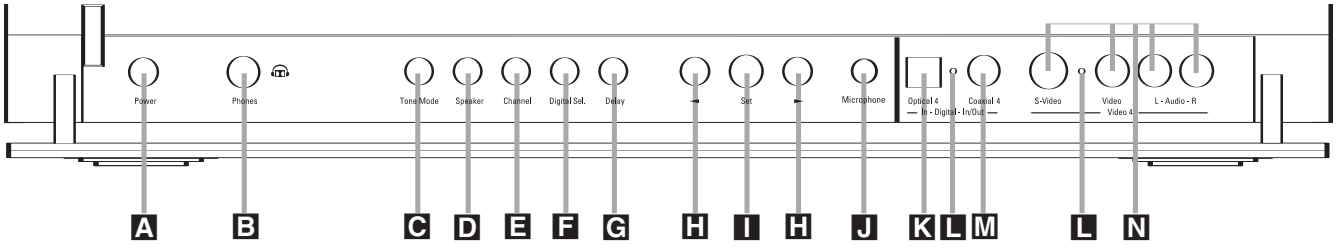

The following controls and jacks are located behind the front-panel door. To open the door, place the edge of a finger on the left or right edge of the panel and gently swing the door down toward you.

A Main Power Switch: Press this switch to apply power to the AVR 745. When the switch is pressed in, the unit is placed in a Standby mode, as indicated by the amber illumination surrounding the **Standby/On Switch 1**. This button MUST be pressed in to operate the unit. To turn the unit off and prevent the use of the remote control, this switch should be pressed until it pops out from the front panel so that the word "OFF" may be read at the top of the switch.

NOTE: This switch is normally left in the "ON" position.

B Headphone Jack: This jack may be used to listen to the AVR 745's output through a pair of headphones. Be certain that the headphones have a standard 1/4" stereo phone plug, or that you use an adapter, as needed, to convert the plug on your headphones to the 1/4" jack used on the AVR. When the headphone jack is in use, the main room speakers will automatically be turned off and the unit will output a standard stereo signal. You may also use the Dolby Headphone mode for an enhanced listening experience.

C Tone Mode Button: This button controls the tone mode settings, enabling adjustment of the bass and treble boost/cut. You may also use it to take the tone controls out of the signal path completely for "flat" response. The first press of the button displays a TONE MODE message in the **Lower Display Line 14** and in the on-screen display. To take the controls out of the signal path, press either of the ◀/▶ **Buttons H** until the display reads TONE OUT. To change the bass or treble settings, press the button again until the desired option appears in the **Lower Display Line 14** and in the on-screen display and then press either of the ◀/▶ **Buttons H** to enter the desired boost or cut setting. See page 40 for more information on the tone controls.

D Speaker Selector Button: Press this button to begin the process of configuring the AVR 745 for the type of speakers it is being used with. For complete information on configuring the speaker settings, see page 33.

E Channel Adjust Selector: Press the button to begin the process of manually adjusting the channel level outputs using the source currently playing through your AVR. For complete information on adjusting the channel output level, see page 48.

F Digital Input Selector: Press this button to begin the process of selecting a digital source for use with the currently selected input. Once the button has been pressed, use the ◀/▶ **Buttons H** to choose the desired input and then press the **Set Button I** to enter the setting into the unit's memory. See page 42 for more information on digital audio.

G Delay Adjust Selector: Press this button to begin the process of adjusting the delay settings for Dolby surround modes. See page 35 for more information on delay adjustments.

H ◀/▶ Buttons: When making system configuration changes using the front-panel controls, press these buttons to scroll through the available choices for the option being adjusted.

These buttons are also used to scroll through the various video processing options. Press either ◀/▶ button to activate Faroudja scaling and processing, or video format conversion without scaling or bypass.

I Set Button: When making system configuration changes using the front-panel controls, press this button to enter a setting into the unit's memory.

J EzSet/EQII Microphone Jack: Before starting the EzSet/EQII automated setup process, plug the microphone into this jack. The microphone does not need to be plugged in at other times.

K Optical 4 Digital Input: Connect the optical digital output of an audio or video product to this jack.

L Input/Output Status Indicators: These LED indicators will normally light green to show that the front-panel **Coaxial 4 Digital Jack M** and **Video 4 Input/Output Jacks N** are operating as inputs. When these jacks are configured for use as outputs, the appropriate indicator will turn red to show that the jack may be used as an output for recording. (See page 47 for more information on configuring the front-panel jacks as outputs, rather than inputs.)

M Coaxial 4 Digital Jack: Connect the coaxial digital input or output for a digital audio product such as a portable audio player or video game to this jack. The jack is normally an input, but may be switched to an output for recording, using the menu system. See page 47 for more information.

N Video 4 Input/Output Jacks: These audio/video jacks may be used as either inputs or outputs for temporary connection to video games or portable audio/video products such as camcorders and portable audio players. (See page 47 for more information on switching one of these jacks between an input and output.)

REAR-PANEL CONNECTIONS

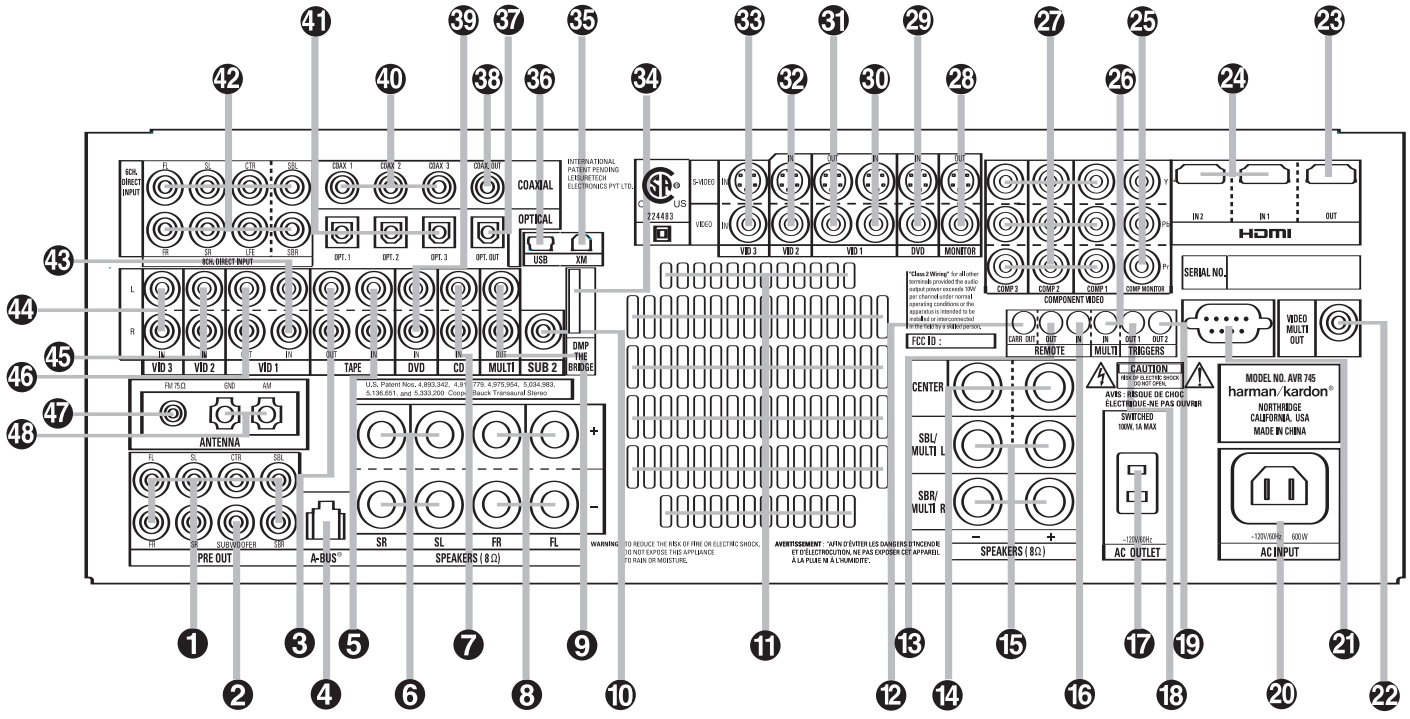

NOTE: To make it easier to follow the instructions that refer to this illustration, a larger copy may be downloaded from the Product Support section for this product at www.harmankardon.com.

1. Preamp Outputs
2. Main Subwoofer Output
3. Tape Outputs
4. A-BUS Connector
5. Tape Inputs
6. Surround Speaker Outputs
7. CD Audio Input
8. Front Speaker Outputs
9. Multiroom Audio Outputs
10. Subwoofer 2 Output
11. Fan Vents
12. Full Carrier IR Output
13. IR Output
14. Center Channel Speaker Outputs
15. Surround Back/Multiroom Speaker Outputs
16. IR Input
17. Switched AC Accessory Outlet
18. Trigger 1 Output
19. Trigger 2 Output
20. AC Power Cord Socket
21. RS-232 Port
22. Multiroom Video Output
23. HDMI Output
24. HDMI Inputs
25. Component Video Monitor Outputs
26. Multiroom IR Input
27. Component Video Inputs
28. Video Monitor Outputs
29. DVD Video Inputs
30. Video 1 Video Inputs
31. Video 1 Video Outputs
32. Video 2 Video Inputs
33. Video 3 Video Inputs
34. The Bridge™ Digital Media Player (DMP) Input
35. XM-Ready Module Input
36. USB Connector
37. Optical Digital Audio Output
38. Coaxial Digital Audio Output
39. DVD Audio Inputs
40. Coaxial Digital Audio Inputs
41. Optical Digital Audio Inputs
42. 8-Channel Direct Inputs
43. Video 1 Audio Inputs
44. Video 3 Audio Inputs
45. Video 2 Audio Inputs
46. Video 1 Audio Outputs
47. FM Antenna Jack
48. AM Antenna Connections

NOTE: To assist in making the correct connections for multichannel input, output and speaker connections, all connection jacks and terminals are color-coded as follows:

Front Left:	White
Front Right:	Red
Center:	Green
Surround Left:	Blue
Surround Right:	Gray
Surround Back Left:	Brown
Surround Back Right:	Tan
Subwoofer:	Purple
Coaxial Digital Audio:	Orange
Composite Video:	Yellow
Component Video "Y":	Green
Component Video "Pr":	Red
Component Video "Pb":	Blue
Optical Digital In:	Black
Optical Digital Out:	Gray

REAR-PANEL CONNECTIONS

❶ **Preamp Outputs:** Connect these jacks to an optional, external power amplifier for applications where higher power is desired.

❷ **Main Subwoofer Output:** Connect this jack to the line-level input of a powered subwoofer. If an external subwoofer amplifier is used, connect this jack to the subwoofer amplifier input. If only one subwoofer is used in your system, connect it here.

❸ **Tape Outputs:** Connect these jacks to the Record/Input jacks of an audio recorder.

❹ **A-BUS Connector:** Connect this jack to optional A-BUS®-certified products to extend the multiroom capabilities of your AVR 745. See page 17 for more information on A-BUS.

❺ **Tape Inputs:** Connect these jacks to the Play/Out jacks of an audio recorder.

❻ **Surround Speaker Outputs:** Connect these outputs to the matching + and – terminals on your surround channel speakers. In conformance with the CEA color-code specification, the blue terminal is the positive (+) terminal that should be connected to the red (+) terminal on the Surround Left speaker with older color-coding, while the gray terminal should be connected to the red (+) terminal on the Surround Right speaker with the older color-coding. Connect the black (–) terminal on the AVR to the matching black negative (–) terminals for each surround speaker. (See page 15 for more information on speaker polarity.)

❼ **CD Audio Inputs:** Connect these jacks to the left/right analog audio output of a compact disc player or CD changer or other audio source.

❽ **Front Speaker Outputs:** Connect these outputs to the matching + or – terminals on your left and right speakers. When making speaker connections, always make certain to maintain correct polarity by connecting the color-coded (white for front left and red for front right) (+) terminals on the AVR 745 to the red (+) terminals on the speakers and the black (–) terminals on the AVR 745 to the black (–) terminals on the speakers. See page 15 for more information on speaker polarity.

❾ **Multiroom Audio Outputs:** Connect these jacks to the optional external audio power amplifier and video distribution system that delivers the source selected for multizone distribution.

❿ **Subwoofer 2 Output:** If your system has two subwoofers, connect one to **Main Subwoofer Output** ❷, and connect the line level input of a second subwoofer to this jack.

⓫ **Fan Vents:** These ventilation holes are the output of the AVR 745's airflow system. To ensure proper operation of the unit and to avoid possible damage to delicate surfaces, make certain that these holes are not blocked and that there is at least 3 inches of open space between the vent holes and any wooden or fabric surface. It is normal for the fan to remain off at most normal volume levels. An automatic temperature sensor turns the fan on only when it is needed.

⓬ **Full Carrier IR Output:** The output of this jack is the full signal received at the **Remote Sensor Window** 16 or input through the **IR Input** ⓰ including the carrier frequency that is removed from signals at the **IR Output** ⓭. Use this output to extend IR remote signals to the input of compatible products by direct connection or through the use of optional, external IR "blasters". If you are in doubt as to which of the two IR Output jacks to use, we recommend that you consult with your dealer or installer, or check with the manufacturer of the external equipment you wish to control.

⓭ **IR Output:** This connection permits the IR sensor in the receiver to serve other remote controlled devices. Connect this jack to the "IR IN" jack on compatible Harman Kardon equipment.

⓮ **Center Channel Speaker Outputs:** Connect these outputs to the matching + and – terminals on your center channel speaker. In conformance with the CEA color-code specification, the green terminal is the positive (+) terminal that should be connected to the red (+) terminal on speakers with the older color-coding. Connect the black (–) terminal on the AVR to the black negative (–) terminal on your speaker. (See page 15 for more information on speaker polarity.)

⓯ **Surround Back/Multiroom Speaker Outputs:** These speaker terminals are normally used to power the surround back left/surround back right speakers in a 7.1-channel system. However, they may also be used to power the speakers in a second zone, which will receive the output selected for a multiroom system. To change the output fed to these terminals from the default of the Surround Back speakers to the Multiroom Output, you must change a setting in the Advanced Menu of the OSD system. See page 51 for more information on configuring this speaker output.

In normal surround system use, the brown and black terminals are the surround back left channel positive (+) and negative (–) connections and the tan and black terminals are the surround back right positive (+) and negative (–) terminals. For multiroom use, connect the brown and black SBL terminals to the red and black connections on the left remote zone speaker and connect the tan and black SBR terminals to the red and black terminals on the right remote zone speaker.

⓰ **IR Input:** If the AVR 745's front-panel IR sensor is blocked due to cabinet doors or other obstructions, an external IR sensor may be used. Connect the output of the sensor to this jack.

⓱ **Switched AC Accessory Outlet:** This outlet may be used to power any device you wish to have turned on when the AVR 745 is turned on with the **Standby/On Switch** 1.

IMPORTANT NOTE: The power consumption of any device connected to the accessory outlet should not exceed 100 watts. Never connect high-power devices such as amplifiers or video displays to the accessory outlet.

⓲ **Trigger 1 Output:** Connect this jack to the "Trigger In" jack of an optional external component such as an audio power amplifier that you want to be controlled to mirror the power state of the AVR 745. When this connection is used, the AVR 745 will automatically send a low-voltage signal to the connected device that turns it on when the AVR 745 is on and off when the AVR 745 is placed in the Standby Mode. The connected component must respond to 6-volt presence as the control signal.

⓳ **Trigger 2 Output:** Connect this jack to the "Trigger In" jack of an optional, external component such as a projection screen or motorized blinds that you want to turn on or off in response to the power state of the AVR 745, but only when certain inputs are selected. (For example, lower a screen when a Video related mode is selected, but not for the tuner or a CD player.) For the 5-volt control signal to be sent to the jack for device control, you must activate the appropriate setting in PAGE 2 of the IN/OUT SETUP menu. See page 23 for more information.

⓴ **AC Power Cord Socket:** Connect the AC power cord here when the installation is complete. To ensure safe operation, use only the power cord supplied with the unit. If a replacement is required, it must be of the same type and capacity.

㉑ **RS-232 Port:** This jack may be used to control the AVR 745 over a bi-directional RS-232 serial control link to a compatible computer or programmable remote control system. Due to the complexity of programming RS-232 commands, we strongly recommend that connections to this port for control purposes be made by a trained and qualified technician or installer.

㉒ **Multiroom Video Output:** Connect this jack to the cable and/or optional, external video distribution system that delivers the video source selected for multizone distribution to remote rooms. Only composite video is available.

REAR-PANEL CONNECTIONS

㉓ **HDMI Output:** Connect this jack to the HDMI input on a compatible HDMI-equipped video display.

㉔ **HDMI Inputs:** Connect the HDMI output of video sources such as a DVD player, set-top box or HDTV tuner to either of these jacks.

㉕ **Component Video Monitor Outputs:** Connect these outputs to the component video inputs of a video display.

㉖ **Multiroom IR Input:** Connect the output of an IR sensor in a remote room to this jack to operate the AVR 745's multiroom control system.

㉗ **Component Video Inputs:** These inputs may be used with any source device that is equipped with analog Y/Pr/Pb or RGB component video outputs, as assigned through the IN/OUT SETUP menu. See page 22 for more information on configuring the component video inputs.

㉘ **Video Monitor Outputs:** Connect these jacks to the composite or S-video input of a TV monitor or video projector to view the on-screen menus and the output of any standard video source selected by the receiver's video switcher.

㉙ **DVD Video Inputs:** Connect the composite or S-video outputs of a DVD player or other video source to these jacks.

㉚ **Video 1 Video Inputs:** Connect the composite or S-video PLAY/OUT jacks of a VCR or other video source to these jacks.

㉛ **Video 1 Video Outputs:** Connect the composite or S-video REC/IN jacks of a VCR or other video recording device such as a DVD recorder or PVR to these jacks.

㉜ **Video 2 Video Inputs:** Connect the composite or S-video PLAY/OUT jacks of a VCR or other video source to these jacks.

㉝ **Video 3 Video Inputs:** Connect the composite or S-video PLAY/OUT jacks of a VCR or other video source to these jacks.

㉞ **The Bridge™ Digital Media Player (DMP) Input:** With the AVR 745 turned off, connect the optional Harman Kardon The Bridge™ to this connector. Once this is done and with a compatible iPod® (optional) docked in The Bridge, selecting the DMP/The Bridge input allows you to play audio programming from the iPod and view navigation menus on the AVR's front panel and any video display connected to the AVR. You may control the iPod's functions and select tracks using the ▲/▼/◀/▶ G, **Set** Q and **Transport** P buttons on the ZR 10 remote or with the "Listen to The Bridge" activity, which activates buttons on the TC 30 for direct control of your iPod through The Bridge. See page 45 for more information.

㉟ **XM-Ready Module Input:** When an optional XM Connect & Play module is connected to this jack, and the XM service activated, you will be able to enjoy the XM Radio through your AVR 745. See page 46 for more information.

㊱ **USB Connector:** Connect a cable with a USB "Mini B" connector to the AVR and the other end to a compatible computer running Windows® 2000, Windows® XP or higher with the latest service packs installed, to use this port to listen to audio from the computer through the AVR 745. This connection is also used to connect a compatible computer to the AVR for firmware upgrades, when available. See page 43 for more information on playback of computer audio with the AVR. Instructions for upgrades will accompany the upgrade file download package.

㊲ **Optical Digital Audio Output:** Connect this jack to the optical digital input connector on a CD-R/RW, MiniDisc or other compatible digital recorder.

㊳ **Coaxial Digital Audio Output:** Connect this jack to the coaxial digital input of a CD-R/RW, MiniDisc or other compatible digital recorder.

㊴ **DVD Audio Inputs:** Connect the left/right analog outputs of a DVD player or other audio source to these jacks.

㊵ **Coaxial Digital Audio Inputs:** Connect the coax digital output from a DVD player, HDTV receiver, LD player or CD player to these jacks. The signal may be a Dolby Digital signal, DTS signal or a standard PCM digital source. Do not connect the RF digital output of an LD player to these jacks.

㊶ **Optical Digital Audio Inputs:** Connect the optical digital output from a DVD player, HDTV receiver, LD player or CD player to these jacks. The signal may be a Dolby Digital signal, a DTS signal or a standard PCM digital source.

㊷ **8-Channel Direct Inputs:** These jacks are used for connection to source devices such as high-resolution DVD players, DVD-Audio or SACD players with discrete analog audio outputs. Depending on the source device in use, all eight jacks may be used, though in many cases only connections to the front left/right, center, surround left/right and LFE (subwoofer input) jacks will be used for 5.1 audio signals.

㊸ **Video 1 Audio Inputs:** Connect the left/right PLAY/OUT audio output jacks on a VCR or other video source to these jacks.

㊹ **Video 3 Audio Inputs:** Connect the left/right PLAY/OUT audio output jacks on a VCR, PVR, cable set-top, satellite receiver, HDTV receiver or other video source to these jacks.

㊺ **Video 2 Audio Inputs:** Connect the left/right PLAY/OUT audio output jacks on a VCR or other video source to these jacks.

㊻ **Video 1 Audio Outputs:** Connect the left/right REC/IN audio input jacks on a VCR or other video source to these jacks.

㊼ **FM Antenna Jack:** Connect the supplied indoor or an optional external FM antenna to this terminal.

㊽ **AM Antenna Connections:** Connect the AM loop antenna supplied with the receiver to these terminals. If an external AM antenna is used, make connections to the **AM** and **GND** terminals in accordance with the instructions supplied with the antenna.

TC 30 REMOTE CONTROL FUNCTIONS

1. USB Connector
2. IR Emitter Window
3. Power Button
4. Activities Button
5. Devices Button
6. Help Button
7. Screen Buttons
8. LCD Screen
9. Page Left/Right Buttons
10. Transport Control Buttons
11. Device Control Buttons
12. Mute Button
13. Volume Controls
14. Navigation Buttons
15. OK/Enter Button
16. Glow Button
17. Channel Up/Down
18. Numeric Keys
19. Infrared Learning Port

NOTES:

- The function names shown here are each button's feature when used with the AVR 745. Most buttons have additional functions when used with other devices.
- To make it easier to follow the instructions that refer to this illustration, a larger copy may be downloaded from the Product Support section for this product at www.harmankardon.com.

TC 30 REMOTE CONTROL FUNCTIONS

❶ **USB Connector:** Push down on the rubber cover to access the USB connecter. To program the TC 30 from our Web site, connect the supplied USB cable here, and then to your computer.

❷ **IR Emitter Window:** Point this end of the remote toward the devices being controlled.

❸ **Power Button:** Press this button to turn the AVR off. Depending on the particular device being controlled, it may turn other devices on or off. When an Activity is in use, pressing this button will turn off all devices associated with the Activity.

❹ **Activities Button:** Press this button to view the list of Activities programmed into your TC 30. Press the **Screen Button** ❼ next to an Activity to select it and turn on the Devices in that Activity.

❺ **Devices Button:** Press this button to display a list of all the Devices programmed in your TC 30. To control the Device, press the **Screen Button** ❼ next to the desired Device's name.

❻ **Help Button:** If you are having problems with an Activity, press this button for interactive help screens that will resolve issues with synchronizing the status of the components in your system.

❼ **Screen Buttons:** Press the buttons at either side of the LCD screen to select the Activity, Device or command shown next to the button.

❽ **LCD Screen:** The LCD screen displays system messages, help screens and the functions assigned to the **Screen Buttons** ❼, depending on the remote's current status.

❾ **Page Left/Right Buttons:** Press these buttons to show additional screen display pages for a Device, Activity or setup function.

❿ **Transport Control Buttons:** Press these buttons to control the transport functions ■/❙◀◀/▶▶❙/▶/●/ ▶▶/◀◀/❚❚ for devices such as DVD or CD players, digital recorders and VCRs when they are active.

⓫ **Device Control Buttons:** These buttons directly control functions of the currently active device. The names on the individual button names are the typical function, but the actual function will vary with the device. When using the TC 30 to setup and configure the AVR 745, press the "Menu" button to activate the on-screen menus.

⓬ **Mute Button:** Press this button to activate the MUTE function of the device being controlled.

⓭ **Volume Controls:** Press these buttons to change the volume of the device being controlled.

⓮ **Navigation Buttons:** The function of the ▲/▼/◀/▶ buttons varies according to the device being controlled.

⓯ **OK/Enter Button:** This button is normally the "Set," "Enter" or "Select" function for the device being controlled, but its function will vary, according to the device being controlled.

⓰ **Glow Button:** Press this button to illuminate the LCD screen and the button backlighting. The backlighting will also come on when any button is pushed. You may change the setting for the length of time the lighting is on through the settings available when your TC 30 is connected to the Internet. The backlighting will also turn on automatically any time you move the remote, thanks to a built-in "tilt sensor." You may disable the "tilt-on" function in the Remote Options section of the TC 30 Web site.

⓱ **Channel Up/Down:** Press these buttons to change the device's channel or station. When controlling the AVR 745's tuner function, these buttons are used to step up or down through the list of stations in the preset memories.

⓲ **Numeric Keys:** These buttons enter numeric values for the device being controlled.

⓳ **Infrared Learning Port:** When "learning" commands from a device's remote into the TC 30, point the IR transmitter on the remote being "learned" here.

ZR 10 REMOTE CONTROL FUNCTIONS

- Ⓐ Power Off Button
- Ⓑ OSD Button
- Ⓒ AVR Selector Button
- Ⓓ Input Selectors
- Ⓔ Tuner Selector
- Ⓕ XM Radio Selector
- Ⓖ Navigation Controls
- Ⓗ Volume Up/Down Buttons
- Ⓘ Disc Skip Buttons
- Ⓙ Numeric Keys
- Ⓚ Blank Buttons
- Ⓛ Clear Button
- Ⓜ Direct Button
- Ⓝ Memory Button
- Ⓞ Tuner Mode Button
- Ⓟ Transport Controls
- Ⓠ Set Button
- Ⓡ The Bridge /DMP Selector
- Ⓢ Mute Button
- Ⓣ IR Transmitter Lens

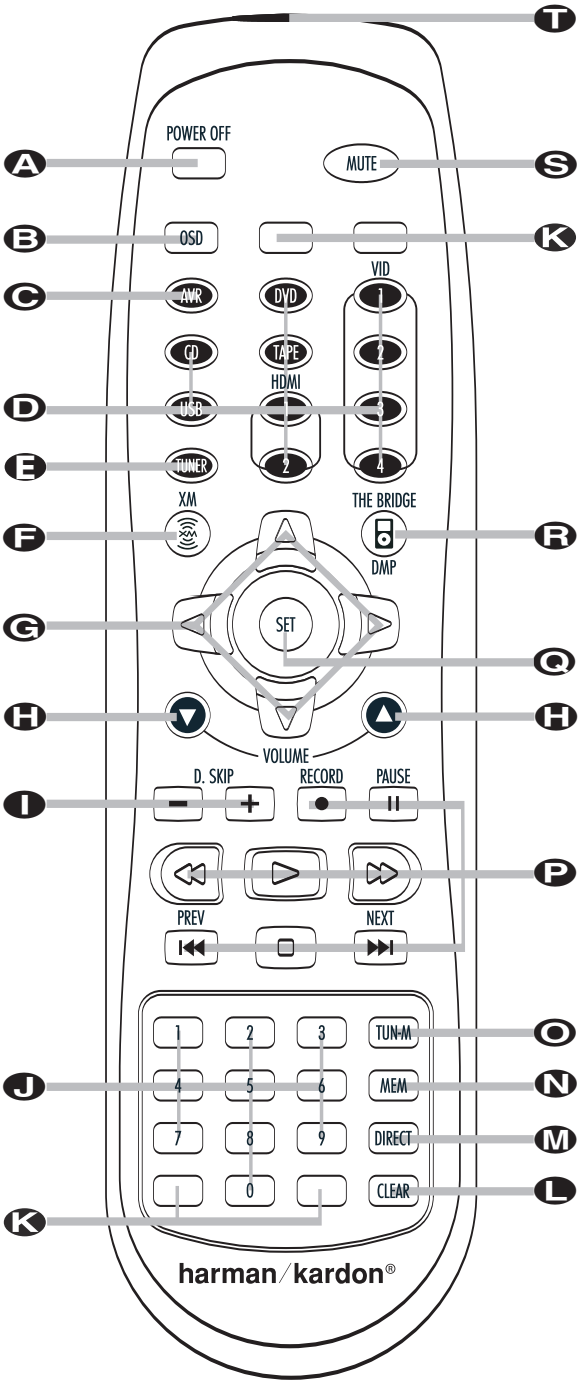

NOTES:

- The ZR 10 remote may be used either in the same room where the AVR 745 is located or in a separate room with an optional infrared sensor or A-BUS product that is connected to the AVR 745's **Multiroom IR Input Jack** ㉖. When it is used in the same room as the AVR 745, it will control the functions of the AVR 745 or any compatible Harman Kardon products in that room. When it is used in a separate room via a sensor connected to the **Multiroom IR Input Jack** ㉖, the buttons for Power, Input Source, Volume and Mute will control the source and volume for the second zone, as connected to the **Multiroom Audio Output Jacks** ❾. (See page 51 for complete information on using the Multiroom system.)
- We strongly recommend that the ZR 10 remote be used for the initial configuration and setup process for the AVR 745.
- To make it easier to follow the instructions that refer to the controls and connectors in this illustration, a larger copy may be downloaded from the Product Support section for this product at www.harmankardon.com.

ZR 10 REMOTE CONTROL FUNCTIONS

A Power Off Button: When used in the room where the AVR 745 is located, press this button to place the unit in Standby. When it is used in a remote room with a sensor that is connected to the **Multiroom IR Input Jack 26**, this button turns the Multiroom system on and off.

B OSD Button: Press this button to activate or turn off the On-Screen Display (OSD) menu system used to set up or adjust the AVR 745's configuration settings.

C AVR Selector Button: Press this button to turn on the AVR 745. The input in use when the unit was last on will be selected.

D Input Selectors: When the AVR 745 is off, press one of these buttons to select a specific input and turn the unit on. When the unit is already in use, pressing one of these buttons will change the input.

E Tuner Selector: Press this button to select the Tuner as the input source and listen to the tuner band last used. Press the button again to change between AM, FM and, if an XM Connect & Play module is connected and activated, XM Radio.

F XM Radio Selector: Press this button to select XM Radio as the input source when an XM Connect & Play module is connected and activated.

G Navigation Controls: Depending on the menu or function in use, pressing these buttons will navigate through menus, scroll through option lists or configuration choices, or move the cursor position. Press the left, right, up or down button, as appropriate to the adjustment being made.

H Volume Up/Down Buttons: When the ZR 10 remote is used in the room where the AVR 745 is located, press this button to raise or lower the volume in that room. When it is used in a remote room with a sensor that is connected to the **Multiroom IR Input Jack 26**, this button will raise or lower the volume in the remote room.

I Disc Skip Buttons: Press these buttons to change discs on compatible Harman Kardon CD or DVD changers or players.

J Numeric Keys: Press these buttons to enter a station's frequency or an XM Radio channel number after the **Direct Button M** is pressed, or when programming the tuner memories. These buttons may also be used for numeric entries when appropriate with other compatible sources.

K Blank Buttons: These buttons are not active. Pressing them will not change or control any function on the AVR 745 or other IR devices.

L Clear Button: When programming the tuner memory, press this button to clear the current entry.

M Direct Button: Press this button when the tuner is in use to start the entry of a station's frequency or an XM channel number for direct access to that station or channel. After pressing this button, press the appropriate **Numeric Keys J**.

N Memory Button: Press this button to enter a station or XM channel number into the AVR 745's memory. First, tune to, or select, the desired station or channel, and then press this button. Within five seconds, while you see the station or channel flash in the **Upper Display Line 13** and in the on-screen display, press the **Numeric Keys J** for the preset number between 01 and 30 that you wish to assign to the station or channel. (See page 46 for more information.)

O Tuner Mode Button: When listening to AM or FM stations, press this button to change the tuner mode between manual and automatic. When the button is pressed so that AUTO/STEREO appears in the **Upper Display Line 13** and in the on-screen display, only stations with acceptable signal quality will be tuned, and the tuner will play FM stations in stereo, when available. In the AUTO mode, when the **Tuning Up/Down Buttons 4 P** are pressed, the unit will automatically search for the next available station with good signal strength. When this button is pressed so that MANUAL/MONO appears in the **Upper Display Line 13** and in the on-screen display, each press of the **Tuning Up/Down Buttons 4 P** will move the frequency up or down in single-step increments. When the FM band is in use, pressing the button so that the MANUAL mode is activated will enable you to tune stations with weak signals by changing to monaural reception. (See pages 45–46 for more information on AM/FM tuner operation.) When listing to XM Radio, press this button to scroll through the following display options for the **Lower Display Line 14**: Channel Name ➛ Channel Category ➛ Artist ➛ Title. (See pages 46–47 for more information on XM Radio operation.)

P Transport Controls: Press these buttons to control the operation of a compatible Harman Kardon DVD or CD player when the AVR 745 is connected to the source unit via the **IR Input Jack 16**. When the AVR's tuner or XM Radio is in use, the ⏮/⏭ **Prev/Next Buttons P** are used to tune up or down through the list of preset stations. the station frequencies or channel numbers.

Q Set Button: When using the configuration menus, press this button to enter a setting to the AVR's memory.

R The Bridge Digital Media Player Selector: When Harman Kardon's The Bridge (optional) is connected to The Bridge **Digital Media Player (DMP) Input 34** and a compatible iPod is docked in The Bridge, pressing this selector will select the iPod as the audio source input device for the AVR 745. In addition, if a video display is connected to one of the **Video Monitor Outputs 25 28**, the iPod's messages will appear on screen, and in the **Upper** and **Lower Display Lines 13 14**. The ▲/▼/◀/▶ **Buttons G**, the **Set Button Q** and the **Transport Controls P** may be used to navigate the iPod and to operate many functions. See page 45, and the manuals for The Bridge and your iPod for more information.

S Mute Button: When the ZR 10 remote is used in the room where the AVR 745 is located, press this button to temporarily silence the unit. When it is used in a remote room with a sensor that is connected to the **Multiroom IR Input Jack 26**, this button will temporarily silence the feed to the remote room only. Press the button again to return to the previous volume level.

T IR Transmitter Lens: The infrared code commands from the remote are sent to the AVR from the components behind this lens. To ensure proper operation, do not block this area when holding the remote.

System Installation

After unpacking the unit, locating it in a place with adequate ventilation and placing it on a solid surface capable of supporting its weight, you will need to make the connections to your audio and video equipment.

Before starting to connect your AVR 745 to the source devices, display device, speakers and other components in your system, you should also unpack the TC 30 remote, which is found in the separate box inside the AVR 745 carton. So that the TC 30 is ready when you begin the system configuration process, install the battery, connect the charger and place the remote in the charging cradle, as it takes approximately twelve hours for the battery to fully charge.

IMPORTANT NOTE: For your personal safety and to avoid possible damage to your equipment and speakers, it is always good practice to turn off and unplug the AVR and ALL source equipment from the AC output before making any audio or video system connections.

Audio Equipment Connections

We recommend that you use high-quality interconnect cables when making connections to source equipment and recorders to preserve the integrity of the signals.

1. Connect the analog output of a CD player to the **CD Audio Inputs** ❼.

NOTE: If your CD player has both fixed and variable audio outputs, it is best to use the fixed output unless you find that the input to the receiver is so low that the sound is noisy, or so high that it is distorted.

2. Connect the analog Play/Out jacks of a cassette deck, MD, CD-R or other audio recorder to the **Tape Inputs** ❺. Connect the analog Record/In jacks on the recorder to the **Tape Outputs** ❸ on the AVR 745.
3. Connect the output of a digital source such as a CD or DVD changer or player, a video game, a digital satellite receiver, an HDTV tuner or digital cable set-top box or the output of a compatible computer sound card to the **Optical** and **Coaxial Digital Audio Inputs** ㊵㊶ⓀⓂ.
4. Connect the coaxial or optical **Digital Audio Outputs** ㊲㊳ on the rear panel of the AVR 745 to the matching digital input connections on a CD-R, MiniDisc or other digital recorder.
5. Assemble the AM loop antenna supplied with the unit so that the tabs at the bottom of the antenna loop snap into the holes in the base. Connect it to the **AM Antenna Connections** ㊽ .

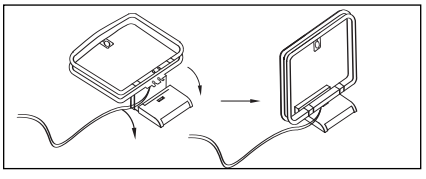

6. Connect the supplied FM antenna to the **FM Antenna Jack** ㊼. The FM antenna may be an external roof antenna, an inside powered or wire-lead antenna or a connection from a cable TV system. If the antenna or connection uses 300-ohm twin-lead cable, you must use an optional 300-ohm-to-75-ohm adapter to make the connection.
7. Connect the front, center, surround and surround back speaker outputs ❻❽⓮⓯ to the respective speakers.

To ensure that all the audio signals are carried to your speakers without loss of clarity or resolution, we suggest that you use high-quality speaker cable. Many brands of cable are available and the choice of cable may be influenced by the distance between your speakers and the receiver, the type of speakers you use, personal preferences and other factors. Your dealer or installer is a valuable resource to consult in selecting the proper cable.

Regardless of the brand of cable selected, we recommend that you use cable with a gauge of 14 or smaller. Remember that when specifying cable, the lower the number, the thicker the cable.

Cable with a gauge of 16 may be used for short runs of less than 10 feet. We do not recommend that you use cables with an AWG equivalent of 18 or higher, due to the power loss and degradation in performance that will occur.

Cables that are run inside walls should have the appropriate markings to indicate listing with UL, CSA or other appropriate testing agency standards. Questions about running cables inside walls should be referred to your installer or a licensed electrician who is familiar with the NEC and/or the applicable building codes in your area.

When connecting wires to the speakers, be certain to observe proper polarity. Note that the positive (+) terminal of each speaker connection has a specific color code, as noted on page 8. However, most speakers still use a red terminal for the positive (+) connection. Connect the "negative" or "black" wire to the same terminal on both the receiver and the speaker.

NOTE: While most speaker manufacturers adhere to an industry convention of using black terminals for negative and red ones for positive, some may vary from this configuration. To ensure proper phase and optimal performance, consult the identification label on your speaker or the speaker's manual to verify polarity. If you do not know the polarity of your speaker, ask your dealer for advice before proceeding, or consult the speaker's manufacturer.

We also recommend that the length of cable used to connect speaker pairs be identical. For example, use the same length piece of cable to connect the front-left and front-right or surround-left and surround-right speakers, even if the speakers are a different distance from the AVR 745.

8. Connections to a single subwoofer are normally made via a line-level audio connection from the **Main Subwoofer Output** ❷ to the line-level input of a subwoofer with a built-in amplifier. When a passive subwoofer is used, the connection first goes to a power amplifier, which will be connected to one or more subwoofer speakers. If you are using a powered subwoofer that does not have line-level input connections, follow the instructions furnished with the speaker for connection information. If your system uses two subwoofers, connect the **Subwoofer 2 Output** ❿ jack on the AVR to the Line Input of the second subwoofer.
9. If an external audio source such as a DVD-Audio, SACD or high definition optical disc player with 5.1 or 7.1 analog audio outputs is part of your system, connect the outputs of the source to the **8-Channel Direct Inputs** ㊷.

Analog Video Equipment Connections

Analog video components are connected in the same manner as audio components. Again, the use of high-quality interconnect cables is recommended to preserve signal quality.

1. Connect the Video Play/Out jacks of a standard (composite) video or S-Video outputs of a digital video recorder or conventional VCR to the **Video 1 Video Inputs** ㉚ on the AVR. Connect the Record/In jacks from that device to the **Video 1 Video Outputs** ㉛ on the AVR.
2. Connect analog Audio Left/Right Play/Out jacks of the device connected to the Video 1 Inputs to the **Video 1 Audio Inputs** ㊸ on the AVR. Connect the analog Audio Left/Right Record/In jacks from that device to the **Video 1 Audio Outputs** ㊻ on the AVR. If the device has a digital audio output, connect it to one of the **Coaxial** ㊵ or **Optical** ㊶ digital audio inputs.
3. Connect the Play/Out jacks of a standard (composite) video or S-Video outputs of a video playback source such as a set-top box or video game console to the **Video 2 Video Inputs** ㉜ or **Video 3 Video Inputs** ㉝. If the device has analog component video (Y/Pr/Pb) outputs, connect them to one of the **Component Video Inputs** ㉗.
4. Connect the analog audio outputs from the source to the matching **Video 2 Audio Inputs** ㊺ or **Video 3 Audio Inputs** ㊹. If the device has a digital audio output, connect it to one of the **Coaxial** ㊵ or **Optical** ㊶ digital audio inputs.
5. If the any of the video source devices has analog component video (Y/Pr/Pb) outputs, but not HDMI, connect them to **Component Video Inputs** ㉗. The chart on page 55 has the default settings for

various source devices, but you may make any connection and change the configuration setting using the IN/OUT SETUP menu, as described on page 22.

6. The default video connection for a DVD player is to use the **Component Video Input 3 Jacks** ㉗ on the AVR, but you may change this assignment in the IN/OUT SETUP menu (see page 22). A DVD player's composite and S-video outputs may also be connected to the **DVD Video Inputs** ㉙. Only one connection type is required, although a composite or S-video connection is required if the AVR 745 is to be used in a multiroom video system.
7. The default audio connection for a DVD player is to link the coaxial digital audio output on the DVD player to the **Coaxial 1 Digital Audio Input** ㊵, but you may also make a connection to either the **Coaxial** ㊵ or **Optical** ㊶ digital inputs, or the **Analog DVD Audio Inputs** ㊴. You may change the assignment in the IN/OUT SETUP menu as described on page 22, or by using the front-panel **Digital Input Selector** F.
8. If you wish to use a portable audio/video product such as a camcorder, portable media player or digital still camera with the AVR, or make a connection to a video game console or other source that may not always be connected to the AVR, connect the video outputs of the source to the **Video 4 Input/Output Jacks** N that are behind the **Front-Panel Door** 9. If the source has digital audio outputs, connect them to the **Optical 4 Digital Input** K or the **Coaxial 4 Digital Jack** M.

   CONNECTION NOTES:

   - When making connections to the **Component Video Inputs** ㉗ or the **Coaxial** ㊵ or **Optical** ㊶ digital audio inputs, it is a good idea to make note of which jacks are connected to which source, using the Worksheet in the Appendix. This will help simplify the configuration process.
   - When connecting a source device such as a cable set-top box where the audio streams may change between digital and analog as you change channels, we recommend that you make both analog and digital connections. The AVR's Auto Poll feature will automatically sense when the digital stream is replaced by an analog output and switch the input accordingly. (See page 22 for more information on the Auto-Poll feature.) This dual connection is not required for sources (such as DVD players or video games) that always output a digital stream.
9. Connect the AVR to your video display using one of the following connections:
   - If you have a video display with an HDMI or DVI input, make the connection using the **HDMI Output** ㉓, as described in the next section.
   - If your video display has component video inputs (Y/Pr/Pb), connect the **Component Video Outputs** ㉕.
   - If your display does not have digital or component video inputs, connect the **Video Monitor Output** ㉘ on the AVR to the matching input on your display. Only one connection is needed, and S-video is the higher quality signal.

HDMI Connections

HDMI™ is the abbreviation for High-Definition Multimedia Interface, which is quickly becoming the standard connection point between advanced video/audio source products and displays, particularly for high-definition video signals. HDMI is a digital connection, eliminating the need to convert signals back and forth from digital to analog to deliver a higher quality signal when used with digital sources. The signals carried on HDMI may, but do not always, include audio, offering the possibility of a complete one-wire connection from a source to the AVR. However, it is important to note that there are a number of different versions of the HDMI standard in use. Before connecting any HDMI products to your AVR, it is helpful to find out in advance their level of HDMI connectivity.

Some source or display components in your system may use DVI (Digital Video Interface) for digital video connections. DVI carries the same digital video signals as HDMI but uses a larger connector and does not transport audio or control signals. In most cases, you may mix and match DVI and HDMI digital video connections by using optional connector adapters. Note, however, that some DVI-equipped video displays are not compatible with the HDCP copy protection coding that is increasingly carried with signals connected via HDMI. If you have an HDMI source and a DVI-equipped display, you may occasionally be unable to view a program if the display does not include HDCP. This is not the fault of the AVR or your source; it simply indicates that the video display is not compatible.

HDMI Input Connections

The different "Version" levels of HDMI define which type of audio signals it is compatible with. Based on the lowest level of HDMI among your sources, the connections to the AVR should be made as follows:

- **HDMI 1.0** sources carry digital video and multichannel or 2-channel PCM audio signals only. Connect the HDMI output of a 1.0 source to either of the **HDMI Inputs** ㉔ on the AVR. If the product is a DVD-Audio player or other source that has multichannel analog audio outputs, connect them to the **8-Channel Direct Inputs** ㊷. With an HDMI 1.0 source, particularly a DVD player, make certain that the menus in the source device are set to "Bitstream Out" or "Original" so that 5.1 digital audio is available. If you find that 5.1 Dolby Digital or DTS audio is not available on the HDMI connection, it will be necessary to make an additional connection between the source and the AVR 745 to either the **Coaxial** ㊵M or **Optical** ㊶K **Digital Inputs**.
- **HDMI 1.1** sources carry the multichannel digital audio output from DVD-Audio players in addition to the digital video. If you have an HDMI 1.1-equipped product, the only connection needed for listening in the main room is from the HDMI output of the source to either of the **HDMI Inputs** ㉔ on the AVR. If the player has SACD capability, you will need to connect the analog outputs of the source to the **8-Channel Direct Inputs** ㊷.
- **HDMI 1.2** (and higher) sources should be connected as shown above for HDMI 1.1, except that a separate analog connection is not needed for SACD players.
- It is not possible to feed an analog composite or S-video signal to a recorder or the AVR's multizone system when an HDMI input is in use. If an HDMI-equipped source also has analog audio and video outputs, connect them to the **Video 2** or **Video 3 Video** ㉜㉝ and **Audio** ㊹㊺ on the AVR.
- In some instances, HDMI-equipped sources will not permit more than one video output at a time, and thus you cannot use the same source in the main listening room and with the recorder or remote zone at the same time. This is not a fault of the AVR, but rather a function of the content protection systems that are part of the HDMI standard.

HDMI Output Connections

Connect the **HDMI Output** ㉓ to an HDMI input on your video display. Thanks to the AVR 745's video processing system, all video input signals are converted to an HDMI output, so only one connection is required between the AVR and your display.

System and Power Connections

The AVR 745 is designed for flexible use with multiroom systems, external control components and power amplifiers.

Main Room Remote Control Extension

If the receiver is placed behind a solid or smoked-glass cabinet door, the obstruction may prevent the remote sensor from receiving commands. In this event, an optional remote sensor may be used. Connect the output of the remote sensor to the **IR Input** ⑯.

If other components are also prevented from receiving remote commands, only one sensor is needed. Simply use this unit's sensor or a remote eye by running a connection from the **IR Output** ⑬ to the Remote IR Input jack on Harman Kardon or other compatible equipment.

If other Harman Kardon-compatible source equipment is part of the main room installation, the **IR Output Jack** ⑬ on the rear panel should be connected to the **IR IN** jack on source equipment. This will enable the

remote room location to control source equipment functions.

When a remote IR sensor is used to control non-Harman Kardon source equipment, we recommend that you make a hard wire connection or use an optional, external IR "blaster" connected to the **Full Carrier IR Output** ❶. If you are in doubt as to which IR Output jack to use for the equipment in your system, contact your dealer or installer, or the manufacturer's support site and ask whether the unit to be controlled uses "full carrier" IR commands. When "full carrier" commands are used, make the connection to the **Full Carrier IR Output** ❶. Otherwise, make the connection to the **IR Output** ⓭.

NOTE: All remotely controlled components must be linked together in a "daisy chain". Connect the **IR OUT** jack of one unit to the **IR IN** of the next to establish this chain.

Multiroom Audio Connections

The AVR 745 is equipped with multizone capabilities that allow it to send a separate audio and video source to the remote zone from the one selected for use in the main room.

Depending on your system's requirements, three options are available for audio connection:

Option 1: Use high-quality, shielded audio interconnect cable from the AVR 745's location to the remote room. In the remote room, connect the interconnect cable to a stereo power amplifier. The amplifier will be connected to the room's speakers. At the AVR 745, plug the audio interconnect cables into the **Multiroom Audio Outputs** ㉛ on the AVR 745's rear panel.

Option 2: Connect the **Multiroom Audio Outputs** ㉛ on the AVR 745 to the inputs of an optional stereo power amplifier. Run high-quality speaker wire from the amplifier to the speakers in the remote room.

Option 3: Taking advantage of the AVR 745's built-in seven-channel amplifier, it is possible to use two of the amplifier channels to power speakers in the remote room. When using this option, you will not be able to use the full 7.1-channel capabilities of the AVR 745 in the main listening room, but you will be able to add another listening room without external power amplifiers. To use the internal amplifiers to power a remote zone, connect the speakers for the remote room location to the **Surround Back/Multiroom Speaker Outputs** ⓯. Before using the remote room, you will need to configure the amplifiers for surround operation by changing a setting in the MULTIROOM menu, following the instructions shown on page 51.

NOTE: For all options, you may connect an optional IR sensor in the remote room to the AVR 745 via an appropriate cable. Connect the sensor's cable to the **Multiroom IR Input** ㉖ on the AVR 745 and use the ZR 10 remote to control the room volume. You may install an optional volume control between the output of the amplifiers and the speakers in options 1 and 2.

Multiroom Video Connections

The AVR 745's multiroom system is designed to send both video and audio signals to a remote room location. This may be the same source that is in use in the main room, or you may select a separate input source through the Multiroom menu or remote, as explained on page 52.

The only additional connection required to add video capabilities to your multiroom system is to connect the **Multiroom Video Output** ㉒ either directly to the video display in the remote room or to any optional video distribution amplifiers that may be required when the length of the connection cable is such that additional amplification is required.

The following items may be of additional assistance when using video as part of a multiroom system with the AVR 745.

- Component or HDMI video sources may not be routed through the multiroom system. When using a component video device, you should also make a composite connection for the multiroom system.
- As with all cable installations, when running any wiring inside a wall be certain that the cable carries the proper NEC rating for the application. The use of improperly rated cables may present a safety hazard. Consult a qualified installer or licensed electrician should you have any questions about the use of in-wall cables for video or audio.
- When connecting the AVR 745 to the remote room video display, be aware of the distance limitations that may exist for both composite and S-video connections. Although the use of low-loss coax for composite video and higher-grade S-video cables may reduce signal loss, optional distribution amplifiers may occasionally be required when long cable runs are used.

A-BUS® Installation Connections

The AVR 745 is among the few receivers available that offer built-in A-BUS/*READY* operation. When used with an optional A-BUS product, you have all the benefits of remote zone operation without the need for an external power amplifier.

To use the AVR 745 with an approved A-BUS product, simply connect it to the AVR 745 using standard Category 5 wiring that is properly rated for the specific in-wall installation. Terminate the wiring at the receiver end to a standard RJ-45 connector in compliance with the instructions furnished with the A-BUS product.

No further installation or adjustment is needed, as the A-BUS jack on the AVR 745 routes the signals to their proper destination for power, signal source and control. The output fed to the A-BUS jack is determined by the AVR 745's multiroom system and menus.

RS-232 Connections

The AVR 745 is equipped with an **RS-232 Serial Connection Port** ㉑ that may be connected to a compatible, optional, external computer, keypad or control system for bidirectional communications that enable the external system to control the AVR, and for the AVR to report status and handshake data back to the controller. Use of the RS-232 port for this type of control requires specific technical knowledge, and we recommend that any connection and programming for control be made by a trained installer or technician familiar with the equipment being used.

The physical connection to the AVR 745's RS-232 port is a standard D-SUB 9 connection, but to ensure compatible and proper operation, specific software commands and pin wiring schemes may be required.

USB Connections

The AVR 745 is one of the few A/V receivers to offer a USB connection that may be used for both playback of compatible audio content from a computer and for loading of system updates (when available).

The physical connection between a computer and the AVR is a simple one, requiring only a cable with a USB "A" type connector on one side and a USB "Mini B" on the other. If you do not need the USB cable provided with the AVR 745 for programming the TC 30 remote, it may be used for this purpose.

Connect the larger, "A" connector on the cable to your computer or a USB hub and the end with the "Mini" USB connector to the **USB Jack** ㉟ on the AVR's rear panel.

NOTES ON USB:

- The USB jack on the AVR 745 is for connection to a computer, or to a hub connected to a computer, only. DO NOT connect it directly to other devices such as card readers, USB memory storage devices, external hard drives, USB accessories, digital cameras or cellular phones. Connection to these devices may cause damage to the device and/or the AVR that is not covered by the AVR's warranty.
- The AVR 745's USB connection may only be used for audio playback and system upgrades. It may not be used for other purposes, such as system control, video or still-image playback.

Trigger Connections

The AVR 745 is equipped with two low-voltage triggers that may be used to control a wide variety of compatible, optional devices that respond to voltage actuation commands. This includes external audio power amplifiers, video screens, motorized blinds and other compatible products in a home theater or automation system. **Due to the complexity of interfacing with power-controlled devices, we strongly recommend that they be installed by a qualified professional.**

INSTALLATION AND CONNECTIONS

Both trigger jacks deliver 5 volts DC when activated, and remove the voltage when they are off. The connection is a 3.5mm mono mini plug with the signal on the center pin ("tip") and the outer shaft ("ring") acting as the negative or ground connection.

The **Trigger 1 Output** ⑱ is for use with devices such as power amplifiers that you wish to activate with whenever the AVR is turned on, regardless of the input selected.

The **Trigger 2 Output** ⑲ is for use with devices such as video screens or motorized blinds that you only wish to activate when specific inputs, such as HDMI, DVD or one of the Video Inputs, are selected. When a device is connected to the Trigger 2 Output, the `TRIGGER 2` setting on `PAGE 2` of the `INPUT/OUTPUT` menus must be set to `ON`. See page 23 for more information.

After checking for voltage, current and polarity compatibility between the device being controlled and the AVR, simply connect one end of the trigger cable to the device being controlled and the other end to the desired Trigger Output on the AVR.

IMPORTANT NOTE ON TRIGGER CONNECTIONS: The current draw from any one Trigger Jack cannot exceed 0.5mA. The combined total current draw for all devices connected when both jacks are in use may not exceed 1.0mA.

XM Radio Connections

XM Radio is a satellite-delivered, subscription-based, programming service that provides a wide range of music, sports, news and information programming with digital audio quality. The AVR 745 is XM Connect & Play-ready, which means that you can easily add the XM service to your home audio system by purchasing an XM antenna module or Passport system, activating an account with XM and then making a simple, single-cable connection to your AVR.

To purchase an XM antenna module or Passport system, consult your dealer, or contact XM Radio at www.xmradio.com. After following the instructions packed with the module, place the XM antenna near a south-facing window and run the cable to the AVR. Connect the plug at the end of the cable to the **XM Module Input** ㉟. If you are using an XM Passport system, remember that the Passport card must be inserted for the system to operate. Once the connection is made, follow the instructions on page 46 for more information on listening to XM Radio.

NOTES on XM Radio:

- XM Radio requires the purchase of additional, optional hardware and a separate subscription to the XM service.
- XM Radio is available only in the Continental United States and Canada. It is not available in Alaska or Hawaii.
- XM reception requires that the antenna be able to "see" the XM satellites or receive a signal from one of the XM ground-based repeaters. Depending on your installation and location, XM service may not be available in some areas.

AC Power Connections

This unit is equipped with an accessory AC outlet that may be used to power accessory devices, but it should not be used with high-current draw equipment such as power amplifiers. The total power draw to each outlet may not exceed 100 watts.

This **Switched AC Accessory Outlet** ⑰ is powered only when the unit is on. This is recommended only for devices that have a mechanical power switch that may be left in the "ON" position.

NOTE: Many audio and video products go into a Standby mode when they are used with switched outlets. This type of product may not operate properly when used with the switched outlet.

The AVR 745 features a removable power cord that allows wires to be run in advance to a complex installation so that the unit itself need not be installed until it is ready for connection. When all needed connections have been made, connect the AC power cord to the **AC Power Cord Jack** ⑳.

The AVR 745 draws significantly more current than other household devices, such as computers, that use removable power cords. For that reason, it is important that only the cord supplied with the unit (or a direct replacement of identical capacity) be used.

Once the power cord is connected, you are almost ready to enjoy the AVR 745's incredible power and fidelity!

Basic Operation

Once you have completed the initial setup and configuration, the AVR 745 is simple to operate and enjoy. The following instructions will help you maximize the enjoyment of your new receiver:

Before using the AVR 745, we strongly recommend that you program the TC 30 remote, following the instructions provided in both the separate TC 30 Installation Guide and the wizards available when the TC 30 is connected to the Internet through your computer. While the TC 30 is preprogrammed to operate the AVR 745 and Harman Kardon DVD players right out of the box, programming the TC 30 for all the components in your system and setting it up for the activities that best match the way you use your home entertainment system will greatly add to the enjoyment of your total home entertainment system.

Turning the AVR 745 On or Off

- When using the AVR 745 for the first time, you must press the **Main Power Switch A** to turn the unit on. This places the unit in a Standby mode, as indicated by the amber illumination surrounding the **Standby/On Switch 1**.
- To turn the AVR 745 on or off from the front panel, press the **Standby/On Switch 1**.
- To turn the AVR 745 on using the TC 30 remote:
  - Press the **Screen Button 7** next to one of the Activities shown on the LCD screen. The preprogrammed Activities include the remote control codes that not only turn on the AVR 745, but also switch it to the input associated with the Activity and turn on a compatible Harman Kardon DVD player when it is part of the Activity. If you have programmed the TC 30 for your own Activities, other devices will turn on and operate as specified in the Activity design.
  - Press the **Devices Button 5** and then press the **Screen Button 7** to the left of AVR. When the options on the LCD screen change, press the **Screen Button 7** to the right of ON to turn the unit on or the one next to OFF to place it in the Standby mode.
- When using the ZR 10 remote, press the **AVR Selector C** to turn the unit on and select the last source that was used. Press any of the **Input Selectors D**, or source-specific buttons such as the **Tuner Selector E**, **XM Radio Selector Button F**, or **The Bridge/DMP Selector Button R** to both turn the AVR 745 on and select that specific source.

Whenever the AVR is turned on, you will see all of the front-panel indicators light up for a few seconds. This is normal, and it is part of the unit's power-on self-test procedure.

NOTE: When an Input Selector or source-specific button on the ZR 10 remote **DEFR** is used to turn the AVR 745 on, press the **AVR Selector C** to use the remote for control of the AVR 745.

To turn the unit off at the end of a listening session, simply press the **Standby/On Switch 1** on the front panel or the **Power Off Button 3A** on the remote. Power will be shut off to any equipment plugged into the rear-panel **Switched AC Accessory Outlet 17** and the illumination around the **Standby/On Switch 1** will turn amber.

When the remote is used to turn the unit "off," it is actually placing the system in a Standby mode, as indicated by the amber lighting around the **Standby/On Switch 1**.

- To set the AVR 745 to turn off after a predetermined time period, press the **Devices Button 5**, followed by the **Screen Button 7** at the top of the row of buttons on the left side of the TC 30, to the left of the A/V receiver image on the LCD screen. Next, press the **Page Left/Right Buttons 9** to view PAGE 2 of the AVR functions.
- To put the AVR in the Sleep mode, press the **Screen Button 7** to the right of the word SLEEP in the LCD. Each press of the button will decrease the time before the AVR shuts down in the following sequence.

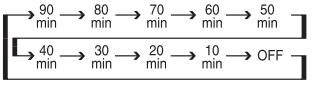

Once you have set the desired Sleep Time, the front-panel display will automatically dim to half-brightness. The display will return to full-brightness when any button on the front panel or a remote is pressed, and then return again to half-brightness. To check on the time remaining until the unit shuts down, follow the instructions shown above to access the **Screen Button 7** for Sleep and press it once.

To cancel the Sleep function, follow the instructions shown above to access the **Screen Button 7** for Sleep and press it first until the information display returns to normal brightness and then again as many times as needed until the words SLEEP OFF appear in the **Lower Display Line 14**..

When you will be away from home for an extended period of time, it is always a good idea to completely turn the unit off with the front-panel **Main Power Switch A**.

NOTE: All preset memories are lost if the unit is left turned off by using the **Main Power Switch A** for more than four weeks.

Source Selection

- To select an input source from the front panel, press the **Input Source Selector Button 7**. Each press of the button will move the input selection through the list of available choices. If the button is pressed when the AVR is in the Standby mode, the first press of the button will turn the unit on and select the last used input.
- When the AVR is already turned on, you may select the tuner directly by pressing the **Tuner Band Selector 4**. The first press will select the last tuned frequency band and station. Each subsequent press will change the band to the last tuned station or XM preset.
- Two options are available for selecting an input source using the TC 30 remote.
  - Pressing the **Activities Button 4** will display the list of preprogrammed activities. Press the **Screen Button 7** next to any activity to turn the unit on, select the input source shown, and perform any other steps that have been programmed into the activity.
  - To directly select a source, first press the **Devices Button 5** and then press the **Screen Button 7** to the left of AV Receiver at the top of the list of options on the **LCD Screen 8**. To select an audio-only input source (Tuner, CD, 6/8-Channel Direct, DMP/The Bridge or Tape), press the **Screen Button 7** to the left of Audio Inputs. When the screen display changes, press the **Screen Button 7** next to the desired input. To select an audio/video input source (Video 1/2/3/4, DVD or HDMI 1/2) press **Screen Button 7** to the right of A/V Inputs. When the screen display changes, press the **Screen Button 7** next to the desired input.
- To select an input using the ZR 10 remote, press one of the **Input Selectors D**, or the source-specific buttons for **Tuner E**, **XM Radio F** or **The Bridge R**.
- When a new input is selected, the AVR will automatically switch to the digital input (if selected), surround mode, component video input, A/V sync delay and Night mode configurations that were in effect the last time that input was used.
- The front-panel **Video 4 Inputs N**, **Optical Digital 3 Input K** or the **Coaxial Digital 3 Input M** may be used to connect a device such as a video game or camcorder to your home entertainment system on a temporary basis.
- As the input source is changed, the new input name will appear momentarily as an on-screen display in the lower third of the video display (except when 720p or 1080i sources are in use). The input name

will also appear in the **Upper Display Line** 13 and in the front-panel **Input Indicators** 11.

- When an audio only source is selected, the last video input used remains routed to the **Video 1/Video 2 Video Outputs** 31 and **Video Monitor Outputs** 28. This permits simultaneous viewing and listening to different sources.
- When a composite or S-video source is selected, the video signal for that input will be routed to the **Video Monitor Output** 28 and will be viewable on a TV monitor connected to the AVR 745.

6-Channel/8-Channel Direct Input

There are four input choices available for use with sources such as DVD-Audio SACD player or HD-DVD or Bluray disc player that are connected to the **8-Channel Direct Inputs** 42. Select the appropriate input according to the way your system and source equipment is configured:

- The `6 CH DIRECT` input should be used when the SBR and SBL inputs are NOT in use and the input source device has its own internal bass management system. This input passes the input from the source directly through to the volume control without any analog-to-digital conversion, and it mutes the unused input jacks to prevent unwanted noise from interfering with system performance.
- The `6 CH DVD AUDIO` input should be used when the SBR and SBL inputs are NOT in use *and* when the input source does NOT have its own internal bass-management system. When this input is in use, the analog source is converted to digital so that you may use the same bass-management options for the direct input as are used for all other inputs. This input also mutes the unused input jacks to prevent unwanted noise from interfering with system performance.
- The `8 CH DIRECT` input should be used when an input is connected to all eight **8-Channel Direct Inputs** 42 and when the input source device has its own internal bass-management system. This input passes the input from the source directly through to the volume control without any analog-to-digital conversion.
- The `8 CH DVD AUDIO` input should be used when an input is connected to all eight **8-Channel Direct Inputs** 42 and when the input source does not have its own internal bass-management system. When this input is in use, the analog source is converted to digital so that you may use the same bass-management options for the direct input as are used for all other inputs.

Volume and Tone Control

- Adjust the volume to a comfortable level using the front-panel **Volume Control** 10 or remote **Volume Up/Down Buttons** 13 H.
- To temporarily silence all speaker outputs, press the **Mute Button** 12 5. This will interrupt the output to all speakers and the headphone jack, but it will not affect any recording or dubbing that may be in progress. When the system is muted, the word `MUTE` will flash in the on-screen display (except when 720p or 1080i sources are in use) and **Upper Display Line** 13; press the **Mute Buttons** 12 5 again to return to normal operation.
- The unit's tone controls may be taken out of the signal path by pressing the **Tone Mode Button** on the front panel C or by pressing the **Devices Button** 5 on the TC 30 remote and then pressing the **Screen Button** 7 to the left of `Tone Mode` at the bottom of the list of options on the bottom left side of the **LCD Screen** 8. The first press of either button will show a message in the on-screen display (except when 720p or 1080i sources are in use) and **Lower Display Line** 14 with the current status of the tone controls. The system default is `TONE IN`, which indicates that the bass and treble controls are active. Press the ▲/▼ **Navigation Buttons** 14 on the TC30 remote or the ◀/▶ **Buttons** H on the front panel to change the setting to `TONE OUT`, which is "flat" response without the tone controls being active.
- When the tone controls are active, the amount of bass and treble boost/cut may be adjusted up to 12dB in 2dB steps by first pressing the **Tone Mode Button** on the front panel C or by first pressing the **Devices Button** 5 on the TC 30 remote and then pressing the **Screen Button** 7 to the left of `Tone Mode` at the bottom of the list of options on the bottom left side of the **LCD Screen** 8 two or three times until the desired setting (`BASS MODE` or `TREBLE MODE`) appears in the on-screen display and the **Lower Display Line** 14. Next, use the ◀/▶ **Navigation Buttons** 14 on the remote or the ◀/▶ **Navigation Buttons** on the front panel H to change the setting as desired. The unit will return to normal operation within five seconds after the setting is changed.
- For private listening, simply place a standard 1/4" stereo headphone plug or adapter into the **Headphone Jack** B behind the door 9 on the front panel. The speakers will automatically mute and a two-channel stereo signal will be sent to the headphones. The **Lower Display Line** 14 will read `DOLBY H: BP`, indicating that the headphone output is in the Bypass mode, and to confirm that no processing is being used. To listen through the headphones using the Dolby Headphone mode, simply press the buttons on the remote or front panel as shown below for changing a Dolby mode. `DOLBY H: DH` will appear in the Lower Display Line when the Dolby Headphone mode is in use.

Surround Mode Selection

One of the most important features of the AVR 745 is its ability to reproduce a full multichannel surround sound field from digital sources, analog matrix surround-encoded programs and standard stereo programs.

Selection of a surround mode is based on personal taste, as well as the type of program source material being used. For example, motion pictures or TV programs bearing the logo of one of the major surround-encoding processes, such as Dolby Surround or DTS Stereo may be played in either the Dolby Digital, Dolby Pro Logic II Cinema, DTS Neo:6 Cinema, or Logic 7 Cinema surround modes, depending on the source material.

NOTE: Once a program has been encoded with matrix surround information, it retains the surround information as long as the program is broadcast in stereo. Thus, movies with surround sound may be decoded via any of the analog surround modes such as Pro Logic II Cinema, Logic 7 Cinema or DTS Neo:6 Cinema, when they are broadcast via conventional TV stations, cable, pay-TV and satellite transmission. In addition, a growing number of made-for-television programs, sports broadcasts, radio dramas and music CDs are also produced in surround sound. You may view a list of these programs at the Dolby Laboratories Web site at www.dolby.com.

Even when a program is not listed as carrying intentional surround information, you may find that the Dolby Pro Logic II, Dolby Pro Logic IIx, Logic 7 or DTS Neo:6, and the Hall or Theater modes often deliver enveloping surround presentations through the use of the natural information present in all stereo recordings.

Surround modes may be changed at any time by using either the front panel or remote control. To select a new surround mode from the front panel, first press the **Surround Mode Group Selector Button** 2 until the desired major surround mode group such as Dolby, DTS or Logic 7 is selected. Next, press the **Surround Mode Selector Button** 3 to choose the specific individual surround mode.

To select a surround mode using the TC 30 remote, first press the **Devices Button** 5, followed by the **Screen Button** 7 at the top of the row of buttons on the left side of the TC 30, to the left of the A/V receiver image on the LCD screen. After the list of options displayed on the **LCD Screen** 8 changes,

Continued on page 42

press the **Screen Button** 7 to the right of `Surr Menu`. The options list will change again, this time showing the major display category modes. The first press of a button will show the current mode from that group if it is already in use, or the first available mode if you are currently using another mode. To cycle through the available modes in that group, press the button again until the desired mode appears in the **Lower Display Line** 14, the on-screen display and the front-panel **Surround Mode Indicators** 15.

The Dolby Digital, Dolby Digital EX, DTS 5.1, DTS-ES Matrix and DTS-ES Discrete modes may only be selected when a digital input is in use. In addition, when a digital source is present, the AVR 745 will automatically select and switch to the correct mode, regardless of the mode that has been previously selected. For more information on selecting digital sources, see the Digital Audio Playback section below.

When the 6-channel/8-channel direct inputs are in use, there is no surround processing, as these inputs take the analog output signals from an external source device and carry them straight through to the volume control without any further digital processing.

To listen to a program in traditional two-channel stereo, using the front left and front right speakers only (plus the subwoofers, if installed and configured), first follow the instructions shown above so that the `AVR: Surround Menu` page of the TC 30 remote is on the **LCD Screen** 8, and then press the **Screen Button** 7 to the right of the Stereo option until `SURROUND OFF` appears in the **Lower Display Line** 14. From the front panel, press the **Surround Mode Group Selector** 2 until the `Stereo` modes appear in the on-screen display and **Lower Display Line** 14. Next, press the **Surround Mode Selector Button** 3 until `SURROUND OFF` appears in the on-screen display and **Lower Display Line** 14.

Digital Audio Playback

Digital audio is a major advancement over older analog surround processing systems. It delivers up to six discrete channels, and each channel reproduces a full-frequency range (20Hz to 20kHz) and offers dramatically improved dynamic range and significant improvements to signal-to-noise ratios. In addition, digital systems have the capability to deliver an additional channel that is specifically devoted to low-frequency information. This is the ".1" channel referred to when you see these systems described as "5.1," "6.1" or "7.1." The bass channel is separate from the other channels, but since it is intentionally bandwidth-limited, sound designers have given it that unique designation. When a digital soundtrack is playing, the number of channels available will vary according to the way in which the program was recorded. Although most movies recorded with digital sound have 5.1 soundtracks, some have 6.1 or 7.1 sound, while others retain the original two-channel or even monaural sound. When the program source is a broadcast, cable or satellite delivered digital program, only one type of soundtrack may be delivered at a time, while optical sources such as DVD may provide more than one audio option. In either case, the decision of what type of sound track and how many channels to offer is up to the program's producer. With the AVR 745 you are able to not only play back the original compatible digital format, but using the processing power of the Texas Instruments DSP processor, it is possible to decode the basic digital track for 2.0 or 5.1 sound and then select an additional "post-processing" mode to deliver additional channels.

Dolby Digital

Dolby Digital is the default format for DVD discs and for the (ATSC) high-definition system used in the United States and Canada. It is also used by the digital satellite program services and is available on most digital cable set-top boxes. When the AVR 745 is connected to a blue-laser-based high-definition optical disc player via an HDMI, coaxial or optical digital connection, the soundtrack from the player is also available in the standard Dolby Digital format so that it may be decoded by the AVR.

An optional, external RF demodulator is required to use the AVR 745 to listen to the Dolby Digital soundtracks available on laser discs. Connect the RF output of the LD player to the demodulator and then connect the digital output of the demodulator to the **Optical** or **Coaxial Inputs** K M 40 41 of the AVR 745. A demodulator is not required for use with high-definition optical disc or DVD players, or with DTS-encoded laser discs.

In order to provide maximum playback compatibility with DVDs, the AVR 745 receiver will always default first to the playback mode embedded in a disc's digital "flag" information. For Dolby Digital discs, the following playback modes are initially selected after the AVR locks to the incoming digital audio data stream to identify the selected:

- When a Dolby Digital 5.1 data stream is detected, the choice of which surround mode is activated is determined by the setting on the `DEFAULT SURR` line of the `SURROUND CONFIG` menu (Figure 19), as shown on page 28.
- When a disc with the Dolby Digital EX format flag is played, your system will automatically switch to the EX mode when seven main-channel speakers are available.
- When a disc with 2.0 Dolby Digital data is detected, the default mode is Dolby Digital with Pro Logic II postprocessing when you have a 5.1 speaker system, or Dolby Digital with Pro Logic IIx postprocessing when you have a 7.1 speaker system.
- Depending on the number of speaker channels available in your system, once the AVR locks to the digital signal, you may select any surround mode or postprocessing option that is available, based on the incoming data stream's possible restrictions and the number of speakers in your system. For example, when a 5.1 or 2.0 audio stream is in use, you may select alternate post-processing such as Logic 7/7-channel Movie Mode postprocessing to create the rear surrounds in 7.1 speaker systems.

DTS

DTS is another digital audio system that is capable of delivering 5.1 or 6.1 discrete or matrix sound field reproduction. Although both DTS and Dolby Digital are digital, they use different methods of encoding the signals, and thus they require different decoding circuits to convert the digital signals back to analog.

DTS-encoded soundtracks are available on select DVD and LD discs, as well as on special audio-only DTS discs. You may use any LD or CD player equipped with a digital output to play DTS-encoded discs with the AVR 745. All that is required is to connect the player's output to either an **Optical** or **Coaxial Input** on the rear panel 40 41 or front panel K M.

In order to listen to DVDs encoded with DTS soundtracks, the DVD player must be compatible with the DTS signal, which is indicated by a DTS logo on the player's front panel. Early DVD players may not be able to play DTS-encoded DVDs. If you are in doubt as to the capability of your DVD player to handle DTS discs, consult the player's owner's manual.

When the AVR 745 is connected to a blue-laser-based high-definition optical disc player via an HDMI, coaxial or optical digital connection, the soundtrack from the player is also available in the standard DTS format so that it may be decoded by the AVR.

NOTE:

- Some DVD players have a default setting that does not pass through the DTS signal. Before playing DVDs with a DTS soundtrack, make certain that the settings in your DVD player have been properly adjusted so that DTS audio is passed through. Consult the owner's manual for your DVD player for more information on making these settings.
- When selecting surround modes, any mode where the setting in its mode group (Dolby, DTS, Logic 7, PCM, etc.) has been set to `OFF` in one of the `SURROUND CONFIG` menus will not appear. You may change the settings in this list at any time by following the instructions on page 28.

Selecting a Digital Source

To utilize either digital mode, you must have properly connected a digital source to the AVR 745. Connect the digital outputs from DVD players, HDTV receivers, satellite systems or CD players to the **Optical** or **Coaxial Inputs** K M 40 41. In order to provide a backup signal and a source for analog stereo recording, the analog outputs provided on digital source equipment should also be connected to their appropriate inputs on the AVR 745 rear panel (e.g., connect the analog stereo audio output from a DVD to the **DVD Audio Inputs** 35 on the rear panel when you connect the source's digital outputs).

If you have not already configured an input for a digital source using the on-screen menus, as shown on page 22, first select the input using the remote or front-panel controls, as outlined in this manual. Next, press the **Devices Button** 5, followed by the **Screen Button** 7 at the top of the row of buttons on the left side of the TC 30, to the left of the A/V receiver image on the LCD screen. After the list of options displayed in the **LCD Screen** 8 changes, press the **Screen Button** 7 to the left of `Setup Menu`. After the options change, press the **Screen Button** 7 to the right of `Digital Input` and then press the ◀/▶ **Navigation Buttons** 14 on the TC 30 remote or the ◀/▶ **Navigation Button** H on the front panel to choose any of the `OPTICAL` or `COAXIAL` inputs, as they appear in the **Upper Display Line** 13 or on-screen display. When the digital source is playing, the AVR 745 will automatically detect which type of digital data stream is being decoded and display that information in the **Upper Display Line** 13.

When both a digital and an analog connection are made between a source device and the AVR, the digital input is the default. If the digital stream is not present or is interrupted, the unit will automatically switch over to the analog inputs for the selected source.

If you wish to disable the auto-polling feature, you may do so by following the instructions shown for the `IN/OUT SETUP` menu (Figure 2), as shown on page 22.

Digital Bitstream and Surround Mode Indications

When a digital source is playing, the AVR 745 senses the type of bitstream data that is present, and automatically selects the proper surround mode. For example, DTS bitstreams will cause the unit to switch to DTS decoding, and Dolby Digital bitstreams will enable Dolby Digital decoding. When the unit senses PCM data from CDs or LDs, you may select any of the standard Dolby or DTS surround modes or Logic 7. Since the range of available surround modes is dependent on the type of digital data that is present, the AVR 745 shows you what type of signal is present to help you understand the choice of modes.

When a digital source is first detected, the AVR 745 will display a message to indicate the type of bitstream being received. It will remain in the **Lower Display Line** 14 for about 5 seconds before that portion of the display returns to the normal surround mode indication.

For Dolby Digital and DTS sources, a numerical indication (such as `3/2/2.1`) will appear, showing the number of channels present in the data.

The first number in the display message indicates how many discrete front-channel signals are present.

- A "3" tells you that separate front left, center and front right signals are available. This will be displayed for Dolby Digital 5.1, Dolby Digital EX and DTS 5.1 or DTS-EX programs.
- A "2" tells you that separate front left and right signals are available, but there is no discrete center channel signal. This will be displayed for Dolby Digital bitstreams that have stereo program material.
- A "1" tells you that there is only a mono channel available in the Dolby Digital bitstream.

The middle number in the display message indicates how many discrete surround channel signals are present.

- A "3" tells you that separate, discrete left surround, center surround and right surround signals are present. This is available only on discs with DTS-ES digital audio.
- A "2" tells you that separate surround left and right signals are available. This will be displayed for Dolby Digital 5.1 and DTS 5.1 programs.
- A "1" tells you that there is only a single, surround-encoded surround channel. This will appear for Dolby Digital bitstreams that have matrix encoding.
- A "0" indicates that there is no surround channel information. This will be displayed for two-channel stereo programs.

The last number indicates whether there is a discrete low-frequency effects (LFE) channel. This is the ".1" in the common abbreviation of "5.1" sound and it is a special channel that contains only bass frequencies.

- A ".1" tells you that an LFE channel is present. This will be displayed for Dolby Digital 5.1 and DTS 5.1 programs, as available.
- A "0" indicates that there is no LFE channel information available. However, even when there is no dedicated LFE channel, low-frequency sound will be present at the subwoofer output when the speaker configuration is set to show the presence of a subwoofer.
- The information on the right side of the display will tell you whether the digital audio data contains a special flag signal that will automatically activate the appropriate 6.1 or 7.1 mode. This will be shown as EX-ON or EX-OFF for Dolby Digital bitstreams and ES-ON or ES-OFF for DTS bitstreams.

When a 2.0 or 5.1 digital source is playing on a system configured for 5.1 operation, you may use Dolby Digital EX, DTS-ES, Logic 7/7 or Dolby Pro Logic IIx to add rear channels for full 7.1 sound fields. Note, however, that the availability of specific modes for postprocessing is dependent on the format of the incoming source material. While some combinations (e.g., a Dolby Digital or DTS 5.1 source with Logic 7/7 or Dolby Pro Logic IIx postprocessing) are allowable, others (e.g., a Dolby Digital 5.1 source with DTS Neo:6) are not. If you wish to add surround back channels to a 2.0 or 5.1 source, we recommend that you experiment with the various options to see which may be available and which are best suited to your taste and listening environment.

It is always a good idea to check the readout for the channel data to make certain that it matches the audio logo information shown on the back of a DVD package. In some cases, you will see an indication for "2/0/0" even when the disc contains a full 5.1, or 3/2/.1, signal. When this happens, check the audio output settings for your DVD player or the audio menu selections for the specific disc being played to make certain that the player is sending the correct signal to the AVR.

PCM Playback

PCM is the abbreviation for Pulse Code Modulation, the digital signal format used for standard CD playback, and other non-Dolby Digital and non-DTS digital sources such as MiniDisc. When a `PCM` signal is detected, the **Lower Display Line** 14 will briefly show a message with the letters PCM, in addition to a readout of the sampling frequency of the digital signal.

In most cases, this will be `PCM 44.1kHz` or `PCM 48kHz`, though in the case of specially mastered, high-resolution audio discs, you will see a `PCM 96kHz` indication. Note that the sampling rate displayed is that of the incoming digital signal, and not the upsampled rate that may be applied to PCM sources when Dolby Pro Logic or Pro Logic II processing is applied, as shown on page 27.

During PCM playback, you may select any surround mode except Dolby Digital or DTS/DTS-ES mode.

USB Playback

The AVR 745 is among the very few A/V receivers capable of direct connection to a computer for audio playback. Once the AVR is connected, audio streams and playback are possible through your AVR, with all the power and performance of the high-current amplifier, your own speakers, and the enhanced multichannel playback made possible through the use of Logic 7, Dolby Pro Logic II/IIx or DTS Neo:6 processing.

The AVR 745's USB connectivity may be used with PC-compatible computers running either Microsoft® Windows® 2000 with Service Pack 4 or higher installed, or Windows XP® or Windows XP Media Center Edition with Service Pack 1 or higher installed. Connect one of the available USB jacks on your computer or a USB hub to the **USB Jack** 36 on the AVR using a cable with a standard USB plug on one side and a USB "Mini B" plug on the other side. You may use an optional cable available at most electronics and computer stores for this purpose, or you may use the cable supplied for use with the TC 30 remote, if it is not being used to program the remote.

In addition, you will need to have a media player installed on the computer. The AVR 745 has been tested for operation with Windows Media Player® Version 8.0 and above, but it is also compatible with many other popular players such as iTunes®, WinAmp® and Real Player®. In most cases, it is best to always make certain that you have the latest version of the player installed to ensure the best compatibility.

When the connection between a computer and the AVR is made for the first time, or if the USB connection is plugged into a different USB jack on a computer or hub that has not been previously connected to the AVR, you will see a series of pop-up messages from Windows to indicate that the computer is configuring itself for the new device. Since the AVR provides a number of different functions, you may see the "Found New Hardware" message up to four times, one each for "A/V Receiver," "Compatible Device," "Audio Receiver" and "Human Interface Device." When all messages have appeared and then cleared the screen, you are almost ready to begin.

Before selecting the USB input, first make certain that one of the media players listed above has been opened on the computer. Then you may select the USB input in any of the following ways:

- To select USB as a source from the front panel, press the **Input Source Selector Button** 7 until USB appears as the input name in the **Upper Display Line** 13 and in the semi-OSD display, if available. The **USB Input Source Indicator** 11 will also light up on the front panel.
- Two options are available for selecting an input source using the TC 30 remote.
  - Press the **Activities Button** 4 to display the list of preprogrammed activities and then press the **Screen Button** 7 to the left of `Listen to USB`. This will both select the USB input and change the remote codes so that the buttons will control the media player on your computer.
  - To directly select the USB input as a source, first press the **Devices Button** 5 and then press the **Screen Button** 7 to the left of `AV Receiver`. When the next page of options appears in the **LCD Screen** 8, press the **Screen Button** 7 to the left of USB.
- To select USB as an input using the ZR 10 remote, press the **USB Input Selector** D.

When the USB input is selected and the AVR 745 is connected to a compatible computer with one of the media players mentioned above open, you may then use the TC 30 to start and stop playback, as well as move to the next track using either the commands that appear in the **LCD Screen** 8 in conjunction with presses of the **Screen Buttons** 7, or the **Transport Controls** 11. Activity of the Transport buttons may vary from one media player to another, but at the very least you will be able to use the Play and Stop buttons. You may also control the media player on a connected computer using the **Transport Controls** P on the ZR 10 remote.

Once playback is started, the audio from a USB source is treated the same as any other two-channel audio source, and you may apply any of the appropriate surround processing modes. When playing back audio from a computer via the USB connection, the internal speakers in a laptop computer are often muted.

Speaker/Channel Indicators

In addition to the bitstream indicators, the AVR 745 features a set of unique channel-input indicators that tell you how many channels of digital information are being received and/or whether the digital signal is interrupted (Figure 31).

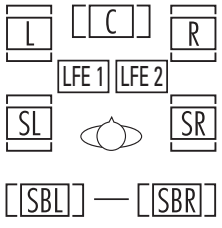

Figure 31

The letters inside the boxes tell you which channels are receiving an input signal. Since conventional analog audio is only two channels, the "L" and "R" letters will light with any analog source. When a digital source is in use, you will see letters displayed that correspond to the number of channels in the incoming data stream, which may be just the L and R for two-channel PCM or 2.0 Dolby Digital material. When a 5.1 signal is being received, the L/C/R/SL/SR indicators will light, with the LFE indication also being shown when an LFE signal is present. All seven indicators, including the SBL/SBR letters, will light for a 7.1 signal, and a horizontal line is shown to connect the SBL/SBR indicators when a 6.1 source is in use.

It is important to note that although Dolby Digital, for example, is referred to as a "5.1" system, not all Dolby Digital DVDs or programs are encoded for 5.1. Thus, it is sometimes normal for a DVD with a Dolby Digital soundtrack to trigger only the "L" and "R" indicators.

NOTE: Many DVD discs are recorded with both "5.1" and "2.0" versions of the same soundtrack. When playing a DVD, always be certain to check the type of material on the disc. Most discs show this information in the form of a listing or icon on the back of the disc jacket. When a disc does offer multiple soundtrack choices, you may have to make some adjustments to your DVD player (usually with the "Audio Select" button or in a menu screen on the disc) to send a full 5.1 feed to the AVR 745. It is also possible for the type of signal feed to change during the course of a DVD's playback. In some cases, the previews of special material will only be recorded in 2.0 audio, while the main feature is available in 5.1 audio. The AVR 745 will automatically sense changes to the bitstream and channel count and reflect them in these indicators.

The letters used by the **Speaker/Channel Input Indicators** 12 will flash to indicate when a bitstream has been interrupted. This will happen when a digital input source is selected before the playback starts, or when a digital source such as a DVD is paused. The flashing indicators remind you that the playback has stopped due to the absence of a digital signal and not through any fault of the AVR 745. This is normal, and the digital playback will resume once the playback is started again.

The boxes around the channel indication letters are used to show which speakers are configured in your system. A small box around the letter indicates that a "Small" speaker has been assigned to that position, while a larger, double box indicates a "Large" speaker assignment.

Note that in some cases, such as an analog stereo or 2.0 digital sources you will see empty speaker position boxes, which indicates that the speaker is active and will receive sound, but that there is no discrete signal for that channel. In other cases you may see letters with no speaker boxes. This indicates that there is a discrete signal for that channel, but due to the mode in use (e.g., Dolby VS with a 5.1 source) there is no signal being sent to the channel.

Night Mode

A special feature of Dolby Digital is the Night mode, which enables specially encoded Dolby Digital input sources to be played back with full digital intelligibility while reducing the minimum peak level by 1/4 to 1/3. This prevents abruptly loud transitions from disturbing others, without reducing the impact of the digital source. The Night mode is available only when Dolby Digital signals with special data are being played.

The Night mode may be engaged at any time when a Dolby Digital source is playing by pressing the **Devices Button** 5 on the TC 30, followed by the **Screen Button** 7 at the top of the row of buttons on the left side of the TC 30, to the left of the `AV Receiver` image on the LCD screen. After the list of options displayed on the **LCD Screen** 8 changes, press the **Page Left/Right Button** 9 to display the next page of options, and press the **Screen Button** 7 to the left of the word `Night`. Each press of the button will change the Night mode setting, as shown in the lower third of the on-screen display (except when 720p or 1080i sources are in use). To turn the Night mode off, press the button as described until `D-RANGE OFF` is shown.

The Night mode may also be selected to always be on at either level of compression using the options in the `DOLBY SURROUND` menu. See page 29 for information on using the menus to set this option.

IMPORTANT NOTES ON DIGITAL PLAYBACK:

- When playing DVDs, please note that even when you have selected a specific digital audio format for playback, an individual disc may change formats or the number of available channels during playback. For example, even if you select a DTS mode for the movie, you may see Dolby Digital in use when the trailers, menus or copyright warnings are playing. This is not a fault with either the AVR or your DVD player, as both are responding to the way the disc was created.

- When viewing digital television signals, note that the number of audio channels available may vary during the course of a program, depending on the content. For example, while a sports event may have 5.1 sound, the commercials or local station content may be in 2.0. In addition, not all local stations are currently equipped for carrying the 5.1 digital audio signals. This may mean that even though the actual program is produced with 5.1, it may be transmitted in a 2.0 configuration in some areas. Your AVR will automatically change to react to the proper type of audio stream if it is changed by the broadcast station.

- Although the AVR 745 will decode virtually all current DVD movies, CDs and HDTV sources, it is possible that some future digital sources may not be compatible with the AVR 745.

- Not all digitally encoded programs contain full 5.1- or 6.1-channel audio. Consult the program guide that accompanies the DVD or laser disc to determine which type of audio has been recorded on the disc. The AVR 745 will automatically sense the type of digital surround encoding used and adjust to accommodate it.

- When a digital source is playing, you may not be able to select some of the analog surround modes such as Dolby Pro Logic II, Dolby Pro Logic IIx, Stereo, Hall, Theater or Logic 7.

- When a Dolby Digital or DTS source is playing, it is not possible to make an analog recording using the **Tape Outputs** 37 and **Video 1 Audio Outputs** 43. However, the digital signals will be passed through to the **Digital Audio Outputs** 37 38 M.

Using The Bridge™

The AVR 745 is equipped for use with Harman Kardon's optional The Bridge™ iPod docking station.

When The Bridge is connected to the AVR and an iPod properly docked, you may use the TC 30 or ZR 10 remote to control the iPod for audio playback using either the TC 30 or ZR 10 remote, while using the front-panel display and on-screen semi-OSD messages to help you locate tracks or view information about the track being played. In addition, connecting an iPod to the AVR 745 through The Bridge also charges the iPod's battery. Using the `DMP AUTO POWER` menu option, as described on page xx, you may even have the AVR 745 automatically turn on with your iPod as a playback source whenever the iPod is turned on.

You may select The Bridge as an input by pressing the **Devices Button** 5 on the TC 30 and then pressing the **Screen Button** 7 next to `Listen to the Bridge`. The **LCD Screen** 8 will change to display options that allow you to control the iPod by pressing the **Screen Button** 7 next to the function you would like to use. You may also use the ZR 10 to control the iPod using the controls outlined in the instructions that are furnished with The Bridge™.

When The Bridge is connected and a compatible iPod properly docked, the iPod's menu will be replaced with "harman/kardon" at the top of the iPod's screen and the front panel display and semi-OSD message will show messages that will guide you through the menu and content selection. If the **Lower Display Line** 14 shows an `UNPLUGGED`... message, please check to see that the correct iPod adapter is used in The Bridge and that the iPod is properly seated.

The AVR's front-panel controls may also be used to access a limited number of iPod functions. Press the **Tuner Mode Button** 17 to play or pause the current track. The **Tuning Selector** 9 may be used to search in reverse (left side of button) or forward (right side of button) through the tracks. Press the **Tuner Band Selector** 11 to call up the iPod's menu. Press the **Preset Station Selectors** 14 to scroll and the **Set Button** 12 to select. For complete information on using the remote or front-panel controls to operate an iPod, see the instructions that are included with The Bridge.

Video Adjustments and Operation

The AVR 745's video system uses the power of DCDi by Faroudja processing in combination with HDMI 1.1 connectivity to allow for connection to virtually any video display with the best possible picture. If the Faroudja processing has not been activated for any source in the `IN/OUT SETUP` menu (Figure 2), you may return to that menu and make the changes shown on page 23 to set a new choice for `VIDEO PROCESSING`, or you may turn the processing on or off using one of these two options:

- From the front panel, press the ◀/▶ **Navigation Buttons** H and observe the choices shown in the **Lower Display Line** 14 or in the semi-OSD message until the desired option appears.

- To change the setting with the TC 30 remote, first press the **Devices Button** 5 and then press the **Screen Button** 7 to the left of `AV Receiver`. When the next page of options appears in the **LCD Screen** 8, press the **Screen Button** 7 to the right of `Video On/Off` to change the setting until the desired processing mode name is shown in the **Lower Display Line** 14 or in the Semi-OSD message.

It is important to note that in some cases you may choose a combination of video processing mode and output settings that is not compatible with the circuitry of your video display. When this happens, an error message will appear in the video display. Follow the on-screen instructions to move back to one of the video menus, and as needed, navigate to the `IN/OUT SETUP` menu (Figure 2) to make the setting change.

Once you're familiar with the operation of the AVR 745, you may wish to experiment with the various source, output, aspect ratio, picture control and display-type settings available in the `IN/OUT SETUP` (Figure 2), `VIDEO MONITOR` (Figure 4) and `VIDEO SETUP` (Figures 5–7) menus, as described on pages 24–27. This will allow you to customize the appearance of your system to the unique characteristics of your specific combination of sources and video display.

AM/FM Tuner Operation

The AVR 745's AM/FM tuner is capable of tuning AM, FM and FM Stereo broadcast stations. Stations may be tuned manually, or they may be stored as favorite station presets and recalled from a 30-position memory.

Tuner and Station Selection

The AVR 745's AM/FM tuner may be selected as the unit's source, and stations changed, by following one of these steps:

- From the front panel, press the **Input Source Selector** 7 until the desired tuner frequency band

(AM, FM or XM) appears. To change stations within a frequency band, press the **Tuning Selection** 4.

- You may also press the front panel's **Tuner Band Selector** 5 to select the tuner. The first press will select the last used frequency band and station. Subsequent presses will change the frequency bands, selecting the last used station or XM program used. Press the **Tuning Selection** 4 to change stations within a frequency band.
- From the TC 30 remote, press the **Devices Button** 5 and then press the **Screen Button** 7 to the left of `Audio Inputs`. When the next page of options appears on the **LCD Screen** 8, press the **Screen Button** 7 to the left of `Tuner`. The tuner will become the active input and the options on the LCD screen will become those needed for tuner operation. Press the **Screen Button** 7 next to any option to use it. For example, press the **Screen Button** 7 next to `FM-AM-XM` to change the frequency band. To tune up or down through the current frequency band, press the **Screen Button** 7 next to `Tuning Up` or `Tuning Down`. When the tuner is the active device on the TC 30, the Channel Up/Down buttons are used to change station presets.
- To directly access the commands used for listening to FM radio, press the **Activities Button** 4 and then press the **Screen Button** 7 to the right of `Listen to FM Radio`.
- To select the tuner from the ZR 10 remote, press the **Tuner Selector** E, or for XM Radio press the **XM Radio Selector Button** F (when an optional XM Connect & Play or Passport module is connected and the programming service has been activated).
- To change the tuning mode, press the **Tuning Mode Selector** 8 or the TC 30 **Screen Button** 7 next to `Tune M`.

  When the button is pressed so that `AUTO/STEREO` appears in the **Upper Display Line** 13, each press will put the tuner in a scan mode that seeks the next higher or lower frequency station with acceptable signal strength. An `AUTO ST TUNED` indication will momentarily appear when the station stops at a stereo FM station, and an `AUTO TUNED` indication will momentarily appear when an AM or monaural FM station is tuned. Press the Tuning buttons again to scan to the next receivable station.

  When the button is pressed so that `MANUAL/MONO` appears in the **Upper Display Line** 13, each tap of the Selector will increase or decrease the frequency by one increment. When the tuner receives a strong-enough signal for adequate reception, `MANUAL TUNED` will appear in the **Lower Display Line** 14.
- Stations may also be tuned directly in either the automatic or manual mode. To enter a station's frequency directly, first select the AM or FM band as shown above. Next, press the **Direct Button** M or the **Screen Button** 7 next to `Direct`. Within 5 seconds of when `DIRECT IN` scrolls in the **Upper Display Line** 13, enter the station frequency by pressing the **Numeric Keys** 11. If you press an incorrect button while entering a direct frequency, press the **Clear Button** L to start over.

NOTE: When FM reception of a station is weak, audio quality will be increased by switching to Mono mode by switching to the `MANUAL/MONO` mode.

Preset Tuning

Using the remote, up to 30 stations may be stored in the AVR 745's memory for easy recall, using the front-panel controls or the remote.

To enter a station into the memory, first tune the station using the steps outlined above. Then:

1. Press the **Memory Button** O on the ZR 10 remote; the station's frequency will flash or press the **Screen Button** 7 next to `Memory`.
2. Within 5 seconds, press the **Numeric Keys** J 18 corresponding to the location where you wish to store this station's frequency. Once entered, the preset number will appear in the **Upper Display Line** 13.
3. Repeat the process after tuning any additional stations to be preset.

Recalling Preset Stations

- To manually select a station previously entered in the preset memory, press the **Numeric Keys** J 18 that correspond to the desired station's memory location.
- To manually tune through the list of stored preset stations one by one, press the **Preset Stations Selector Buttons** 6 22 on the front panel or the remote, the **Prev/Next Transport Controls** P on the ZR 10 remote, or the **Channel Up/Down Buttons** 17 on the TC 30 remote control when the tuner is the active input device.

XM Radio Operation

XM Radio is a satellite-delivered service that offers hundreds of program channels, as well as local traffic and weather information for select cities. The AVR 745 is "XM Ready," which means that the unit is able to receive the XM service when an optional XM Connect and Play or Passport module is connected and the service activated. You may purchase the antenna module needed for XM Radio from many electronics or online retailers, or directly from XM Radio through the "Home Receivers" section of the XM Radio Store at www.xmradio.com.

Once you have purchased the XM module, follow the instructions accompanying it to activate the XM Service. Connect the plug on the XM module to the **XM Ready Module Input** 35 on the rear panel of the AVR 745. For best results, point the antenna module out a window, again, following the instructions packed with the XM product. If a window view is not available for the antenna, XM Radio operates a series of terrestrial repeater stations that may be able to provide reception, though this service is not available everywhere.

IMPORTANT NOTE: XM Radio requires both the optional, external antenna module and a subscription to the XM Radio service. Antenna and service sold separately; XM Radio is not available in Alaska or Hawaii.

If you need to view the antenna module's number, connect it to the AVR and then follow one of the steps shown below to select XM Radio as the input source. Tune to "000" to get a readout of the number.

Once you have an activated module connected, follow one of these steps to select XM Radio as your system's audio source:

- From the front panel, press the **Input Source Selector** 7. If XM was the last used tuner source, it will appear; or press the button again until XM Radio is heard. Press the **Tuning Selection** 4 to change stations within a frequency band. Press the **Tuning Selection** 4 to select a different XM channel.
- From the TC 30 remote, press the **Devices Button** 5 and then press the **Screen Button** 7 to the left of `Audio Inputs`. When the next page of options appears on the **LCD Screen** 8, press the **Screen Button** 7 to the left of `Tuner`. The tuner will become the active input and the options on the LCD screen will become those needed for tuner operation. Press the **Screen Button** 7 next to any option to use it. For example, to tune up or down through the current frequency band, press the **Screen Button** 7 next to `Tuning Up` or `Tuning Down`. When the tuner is the active device on the TC 30, the Channel Up/Down buttons may be used to change station presets.
- The easiest way to select XM Radio as a source with the TC 30 remote is to invoke the XM Activity. First press the **Activities Button** 4 and then press the **Screen Button** 7 to the right of `Listen to XM Radio`. This will both select XM Radio as the unit's input and change the options shown on the **LCD Screen** 8 to those appropriate for XM Radio. To tune through the list of

available XM channels, press the **Screen Button** 7 next to `Tuning Up` or `Tuning Down`.

- To select the tuner from the ZR 10 remote control, press the **XM Radio Selector Button** F. Channels are selected using the **Prev/Next Transport Controls** P.

While using XM Radio is similar in many ways to AM/FM terrestrial radio, the wide range of program choices available, as well as the ability of the XM service to add special data and information tags into the digital audio data stream, means that some of the front-panel and remote controls traditionally used for tuner operation have different functions with XM Radio.

- When XM Radio is the AVR's source, the channel number will appear in the **Upper Display Line** 13, along with an indication of the Preset number, if any, and a series of bars at the far right end of the display. These bars (not shown in the semi-OSD message), show the current signal strength similar to the signal strength displays on a cellular phone.
- The current channel's name will normally appear in the **Lower Display Line** 14. For local traffic information, the name of a city will be shown in place of the channel name. You may change this display to show the current artist and track title information by pressing the **Tuning Mode Selector** 8 O or the **Screen Button** 7 that is next to `Tune M-XM Display` when you are using the TC 30's Tuner pages to operate the AVR. When you are listening to a channel with local traffic information in the "200" series of channel numbers, these buttons change the display to show the temperature and current weather for the selected city.
- To tune a channel number directly, simply press the **Numeric Keys** 18 J. Unlike standard AM/FM tuner operation, it is not necessary to press the Direct Button first.
- The AVR 745 has five banks of preset memories for XM Radio, each with eight memory positions and designated by a letter ("A" through "E"). To store a channel into a memory group, first press the **OK/Enter Button** 15 when using the TC 30 remote control to operate the AVR's XM Radio function, or the **Set Button** Q on the ZR 10 remote until `PRESET SEARCH` appears in the **Upper Display Line** 13 and on the top line of the semi-OSD display. Next, press the ◀/▶ **Navigation Buttons** 14 G until the desired preset memory bank letter appears in the **Lower Display Line** 14 and in the bottom line of the semi-OSD display. Next, press the **Memory Button** N or the **Screen Button** 7 next to the word `Memory` on the LCD screen and note that a dash will start to flash next to the preset memory bank letter. Within five seconds, press the **Numeric Button** 18 J from 1 to 8 for the memory slot you wish to use.
- To tune up or down through a list of channels stored in the currently active preset memory, press the **Channel Up/Down Buttons** 17 on the TC 30 or the **Screen Button** 7 next to `Next Preset` or `Prev Preset` when the "Listen to XM Radio Activity" is in use. You may also use the **Preset Station Selector** 6 on the front panel. To change to another preset bank, press the **Set Button** I Q on the front panel or the ZR 10 remote, or the **OK/Enter Button** 15 when using the TC 30 remote, and then press the ◀/▶ **Navigation Buttons** 14 G until the desired preset memory bank letter appears in the **Lower Display Line** 14 and in the bottom line of the semi-OSD display.
- Each XM Radio channel is assigned a category, which may be viewed by pressing the **Tuning Mode Selector** 8 O or the **Screen Button** 7 that is next to `Tune M-XM Display` when you are using the TC 30's Tuner pages to operate the AVR. You may search for an XM channel in any of the categories by first pressing the **Set Button** I Q on the front panel or ZR 10 remote, or the **OK/Enter Button** 15 when using the TC 30 remote, and then pressing the ◀/▶ **Navigation Buttons** 14 G until the desired category name appears in the **Lower Display Line** 14 and in the bottom line of the semi-OSD display. Press the **Set Button** I Q or **OK/Enter Button** 15 again to start the search for the next channel in that category.
- Note that you may see a `LOADING` message, indicating that the XM tuner is downloading content and may not be able to operate. If the message continues to appear, check to see whether the XM antenna is properly positioned toward a south-facing window, experiment with the antenna position, or change to another input and then reselect XM Radio.

Recording

In normal operation, the audio or video source selected for listening through the AVR 745 is sent to the record outputs. This means that any program you are watching or listening to may be recorded simply by placing machines connected to the outputs for **Tape Outputs** 37 or **Video 1/Video 2 Audio** and **Video Outputs** 17 19 40 42 in the record mode.

When a digital audio recorder is connected to the **Digital Audio Outputs** 30 34 M, you are able to record the digital signal using a CD-R, MiniDisc or other digital recording system.

NOTES:

- The digital outputs are active only when a digital signal is present, and they do not convert an analog input to a digital signal, or change the format of the digital signal. In addition, the digital recorder must be compatible with the output signal. For example, the PCM digital input from a CD player may be recorded on a CD-R or MiniDisc, but Dolby Digital or DTS signals may not.
- The **Front-Panel Video 4** N and **Coaxial 4** M jacks may be configured for use as outputs, allowing connection to a recorder, when the steps shown in the section below are followed.
- Please make certain that you are aware of any copyright restrictions on any material you copy. Unauthorized duplication of copyrighted materials is prohibited by federal law.

Front-Panel Connections

In addition to the rear-panel digital and analog outputs, the AVR 745 offers Harman Kardon's exclusive configurable front-panel output-jack feature. For easy connection of portable devices, you may switch the front-panel **Video 4 Jacks** N or the **Coaxial Digital 4 Jack** M from an input to an output by following these steps:

1. Press the **Devices Button** 5 on the TC 30 remote and then press the **Screen Button** 7 next to `AV Receiver` and then press the **Menu Button** 11 or press the **OSD Button** B to view the `MASTER MENU` (Figure 1).
2. Press the **OK/Enter Button** 15 or the **Set Button** Q to enter the `IN/OUT SETUP` menu (Figure 2).
3. Press the ▼ **Navigation Button** 14 G so that the on-screen cursor is next to `VIDEO 4` or `COAXIAL 4`.
4. Press the **OK/Enter Button** 15 or the **Set Button** Q and then press the ◀/▶ **Navigation Buttons** 14 G so that the word `OUT` is highlighted.
5. Press the **OK/Enter Button** 15 or the **Set Button** Q to enter the change.
6. Press the **Menu Button** 11 or press the **OSD Button** B to exit the menus and return to normal operation.

Once the setting is made, the **Input/Output Status Indicator** L will turn red, indicating that the jacks are now outputs, instead of in the default setting as inputs. Once changed to an output, the setting will remain as

long as the AVR 745 is turned on, unless the setting is changed in the OSD menu system, as described above. However, once the AVR 745 is turned off, the setting is canceled. When the unit is turned on again, the front-panel jacks will return to their normal default setting as inputs. If you wish to use the jacks as outputs at a future time, the setting must be changed again using the OSD menu system, as described above.

Output Level Trim Adjustment

Normal output level adjustment for the AVR 745 is established using EzSet/EQII, as outlined on pages 29–33. In some cases, however, it may be desirable to trim the output levels using program material such as a test disc, or a selection you are familiar with. Additionally, the output level for the subwoofer can only be adjusted using this procedure.

To adjust the output levels using program material, first set the reference volume for the front left and front right channels using the **Volume Control** 10 B H.

Press the **Devices Button** 5 on the TC 30 remote and then press the **Screen Button** 7 next to AV Receiver. Next, press the **Screen Button** 7 next to Setup Menu and after the choices in the **LCD Screen** 8 change, press the **Screen Button** 7 next to Channel and FRONT L LEVEL will appear in the **Lower Display Line** 14. To change the level, first press the **OK/Enter Button** 15 or the **Set Button** Q, and then use the ▲/▼ **Navigation Buttons** 14 G to raise or lower the level. DO NOT use the volume control, as this will alter the reference setting.

Once the change has been made, press the **OK/Enter Button** 15 or the **Set Button** Q and then press the ▲/▼ **Navigation Buttons** 14 G to select the next output-channel location that you wish to adjust. To adjust the subwoofer level, press the ▲/▼ **Navigation Button** 15 until WOOFER LEVEL appears in the **Lower Display Line** 14 or on-screen display.

Repeat the procedure as needed until all channels requiring adjustment have been set. When all adjustments have been made and no further adjustments are made for 5 seconds, the AVR 745 will return to normal operation.

The output levels may also be adjusted using the on-screen menu system to either the internal test tone or an external test disc by following the instructions shown on page 37

EzSet/EQII Operation

A major advantage of EzSet/EQII over competitive systems is its ability to store up to three different EQ Designs. This allows you to preset different combinations of speakers or manually set adjustments, or perhaps create different EQ Designs with the microphone in different locations to optimize the system for either your favorite listening position, or for a different setting when more people are in the listening room. You may also turn off the EzSet/EQII system entirely so that you may compare the sound of your system with the system in a particular EQ Design, or with it out of the system.

To access the settings for selecting an EQ Design preset, press the **Devices Button** 5 on the TC 30 followed by the **Screen Button** 7 at the top of the row of buttons on the left side of the TC 30, to the left of AV Receiver on the LCD screen. After the list of options displayed in the **LCD Screen** 8 changes, press the **Page Left/Right Button** 9 to go to the second page of AV Receiver settings. When that page of settings appears, you may do the following:

- Press the **Screen Button** 7 to the left of EQ On/Off to bring the EQ settings into the signal path, or to put the system in the Bypass mode, which removes the equalization filters.
- Press the **Screen Button** 7 to the left of EQ Presets to cycle through the EQ Designs stored in each of the three memory positions, as shown in the instructions on page 38.

Subwoofer Control

If you have a 7.2 system with two subwoofers present, you may occasionally wish to turn one of the subwoofers off to accommodate your preferences with a particular movie or musical program, or to demonstrate the change made by using one subwoofer or two. To do this, press the **Devices Button** 5 on the TC 30 followed by the **Screen Button** 7 at the top of the row of buttons on the left side of the TC 30, to the left of AV Receiver on the LCD screen. After the list of options displayed on the **LCD Screen** 8 changes, press the **LCD Screen** 8 to go to the second page of AV Receiver settings. When that page of settings appears, press the **Screen Button** 7 to the left of Sub 2 On/Off to turn the feed to the second subwoofer on or off.

Dim Function

Since the AVR 745 will often be used when movies or other kinds of video programming are viewed under low-light conditions, you may wish to lower the brightness of the front-panel displays and indicators so that they do not distract from the video presentation. You may dim the displays using the menu system, as shown on page 49, or you may control the brightness directly from the remote.

Press the **Devices Button** 5 on the TC 30 remote and then press the **Screen Button** 7 next to AV Receiver. Next, press the **LCD Screen** 8 and after the choices in the **LCD Screen** 8 change, press the **Screen Button** 7 next to Dim. Note that when the displays are dimmed or turned off, the blue lighting around the **Standby/On Switch** 1 will continue to stay lit as a reminder that the AVR is still turned on. The accent lighting for the **Volume Control** 10 will remain at its normal level, rather than dim when the panel displays are at half-brightness.

Note that all changes to the front-panel brightness level are temporary; the displays will return to full-brightness after the AVR is turned off and then on again. To return the displays to full-brightness without turning the unit off, return the TC 30 to the AVR Device screen, and press the **Screen Button** 7 next to Dim as needed until the displays are on.

In addition to lowering the brightness of the displays or turning them off completely, you may wish to have them appear whenever a button on the remote or front panel is pushed, and then gradually fade out after a set time period. You may do this by making the appropriate settings in the VFD FADE TIME OUT line of the ADVANCED SELECT menu, as shown on page 49.

Memory Backup

This product is equipped with a memory backup system that preserves the system configuration information and tuner presets if the unit is accidentally unplugged or subjected to a power outage. This memory will last for at least four weeks, after which time all information must be reentered.

TROUBLESHOOTING GUIDE

SYMPTOM	CAUSE	SOLUTION
Unit does not function when Main Power Switch is pushed	• No AC Power	• Make certain AC power cord is plugged into a live outlet • Check to see whether outlet is switch-controlled
Display lights, but there is no sound or picture	• Intermittent input connections • **Mute** is on • Volume control is down	• Make certain that all input and speaker connections are secure • Press **Mute Button** ⑫Ⓢ • Turn up volume control
Unit turns on, but front-panel display does not light up	• Display brightness is turned off	• Follow the instructions in the Display Brightness section on pages 48–49 so that the display is set to VFD FULL
No sound from any speaker; light around power switch is red	• Amplifier is in protection mode due to possible short • Amplifier is in protection mode due to internal problems	• Check speaker wire connections for shorts at receiver and speaker ends • Contact your local Harman Kardon service center
No sound from surround or center speakers	• Incorrect surround mode • Input is monaural • Incorrect configuration • Stereo or Mono program material	• Select a mode other than Stereo • There is no surround information from mono sources • Check speaker mode configuration • The surround decoder may not create center- or rear-channel information from nonencoded programs
Unit does not respond to remote commands	• Weak batteries in remote • Wrong device selected • Remote sensor is obscured	• Change remote batteries • Press the AVR selector • Make certain front-panel sensor is visible to remote or connect remote sensor
Intermittent buzzing in tuner	• Local interference	• Move unit or antenna away from computers, fluorescent lights, motors or other electrical appliances
Letters flash in the channel indicator display and digital audio stops	• Digital audio feed paused	• Resume play for DVD • Check that Digital Input is selected
Fan does not appear to operate	• Additional cooling may not be required	• The fan is activated only when additional cooling is required due to high internal temperature, it is normal for the fan to be inactive at normal volume levels

In addition to the items shown above, additional information on troubleshooting possible problems with your AVR 745, or installation-related issues, may be found in the list of "Frequently Asked Questions" which is located in the Product Support section of our Web site at www.harmankardon.com.

Processor Reset

In the rare case where the unit's operation or the displays seem abnormal, the cause may involve the erratic operation of the system's memory or microprocessor.

To correct this problem, first unplug the unit from the AC wall outlet and wait at least 3 minutes. After the pause, reconnect the AC power cord and check the unit's operation. If the system still malfunctions, a system reset may clear the problem.

To clear the AVR 745's entire system memory including tuner presets, output level settings, delay times and speaker configuration data, first put the unit in Standby by pressing the **Standby/On Switch** 1. Next, press and hold the **Surround Mode Group Selector** 2 and the **Tuning Mode Selector** 8 buttons for 3 seconds.

The unit will turn on automatically and display the RESET message in the **Upper Display Line** 13.

NOTE: Resetting the processor will erase any configuration settings you have made for speakers, output levels, surround modes, and digital input assignments, as well as the tuner presets. After a reset, the unit will be returned to the factory presets, and all settings for these items must be reentered.

If the system is still operating incorrectly, there may have been an electronic discharge or severe AC line interference that has corrupted the memory or microprocessor.

If these steps do not solve the problem, consult an authorized Harman Kardon service center.

MRK	DATE	PNO	REVISION RECORD	DR.	MAK	DATE	PNO	REVISION RECORD	DR.
1					1				
2					2				
3					3				
4					4				

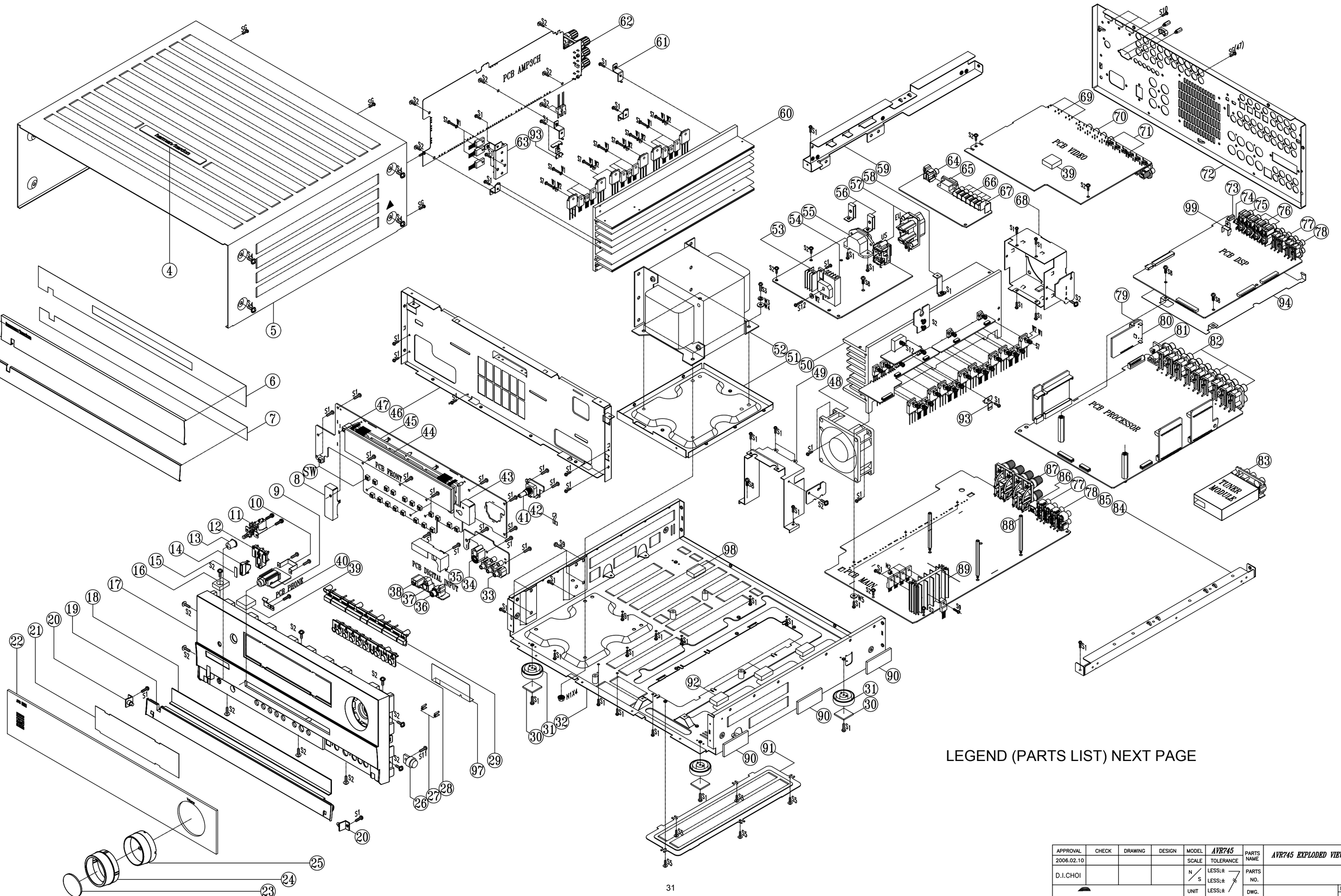

LEGEND (PARTS LIST) NEXT PAGE

APPROVAL	CHECK	DRAWING	DESIGN	MODEL	AVR745	PARTS NAME	AVR745 EXPLODED VIEW
2006.02.10				SCALE	TOLERANCE		
D.I.CHOI				N / S	LESS;±	PARTS NO.	
				UNIT m/m	LESS;± LESS;±	DWG. NO.	REV.

	LEGEND FOR AVR 745 EXPLODED VIEW PREVIOUS PAGE		
Item #	**Part Number**	**Description**	**Qty**
1	H03-ZMC11S00200	AL DOOR AVR430/630	1
2	H03-ZPD2702GAGY	AL PANEL AVR745	1
3	H03-ZPD2703GAGY	BADGE AL HARMAN/KARDON SILVER	1
4	H03-ZMD27S20A00	BADGE harman/kardon COVER TOP AVR745	1
5	H03-ZMD27S08A00	COVER TOP AVR745	1
6	H03-ZVC11DWT200	TAPE PANEL	1
7	H03-ZVC11DWT100	TAPE DOOR	1
8	H03-ZMD12S01A00	SHIELD IR	1
9	H03-SOSS9CKX3NN	JACK PHONE CKX3-6.35-04 BK	1
10	H03-ZMB01S00100	BKT HEADPHONE JACK	1
11	H03-SWA2B21PDA-R	SWITCH PUSH SDDLB15700 250V 5A	1
12	ZPC1006GAWH	BUTTON STANDBY	1
13	ZPC1003GAGY	BUTTON POWER	1
14	ZPC1007GAMW	INDICATOR STAND-BY	1
15	H03-ZMC11S12A00	CAP BUTTON STAND-BY	1
16	ZFD122062SB	RUBBER TOP	1
17	ZPD2701GAGY	PANEL FRONT AVR745	1
18	H03-ZMC11S14A00	BRACKET DOOR	1
19	ZPC1002GAGY	DOOR AVR430/630	1
20	H03-ZMD05S16A00	BKT HINGE	2
21	H03-ZPC1018GART	FILTER VFD DPR2005	1
22	H03-ZPD2719GABT	WINDOW DISPLAY AVR745+BADGE NAME AVR745	1
23	H03-ZPD0317GACR	CAP KNOB VOLUMN	1
24	H03-ZPD0316GASG	COVER KNOB	1
25	H03-ZPD0315GAMW	VOLUMN KNOB	1
26	H03-ZVC11GEAR01	DAMPER GEAR DP120	1
27	ZPC1102GAMW	INDICATOR VIDEO 4	2
28	ZPC1005GAGY	BUTTON 8 KEY	1
29	H03-ZPC1004GASG	BUTTON 7 KEY	1
30	ZFNR19720SB	RUBBER FOOT 19.7X19.7.2T BK	4
31	ZPC1103GAGY	FOOT 50MM 15.8MM	4
32	H03-ZMD27S13A00	CHASSIS MAIN AVR745	1
33	H03-SORA3313PNN	JACK RCA 3P JK0300081N YWR	1
34	H03-SORA8OSC5N8	JACK S-VIDEO 1P C40160261N	1
35	H03-ZMC12S17A00	AC PUN SHIELD DIGITAL ET	1
36	H03-SORA1JE01NN	JACK RCA 1P JE010003MN 1P	1
37	H03-SOTOR179LBA	JACK OPTICLA D-LEM TORX-179L	1
38	H03-SO3P5179NNN	JACK PHONE 3.5PI PJ0435179N	1
39	ZFD122072SB	RUBBER TOP	2
40	H03-ZMC11S06A00	SPRING STOPPER	1
41	H03-SWE3A0505S1	SWITCH ROTARY EC16B24204 5V 5MI0A 10T 3P	1
42	H03-ZMB01S02200	SPRING PLATE GND C5212 0.2T	5
43	H03-ZMD12S01B00	SHIELD MICROPHONE	1
44	H03-VD18BT19GIN	VFD 18-BT-19GINK	1
45	ZPC1017GABK	FL GUIDE DPR2005	1
46	H03-ZMC11S07A00	CH FRONT	1
47	H03-ICROMA138EC	IC ROMOCON SENSE ROM-A138TEC	1
48	H03-ZVJF0925X00	FAN DC JF0925x1M 12V 92x92x25mm	1
49	H03-ZMC11S09A00	BKT FAN FRONT	1
50	H03-ZMD27HS0200	H/SINK MAIN AVR745	1
51	H03-ZMC12S08B00	BKT TRANS BOTTOM	1
52	H03-TXPWMEINAB0	MAIN TRANS	1
53	H03-ZMC12HS0100	HEATSINK 17x15x30	1
54	H03-ZMC11HS0400	HEATSINK DIODE 47x26x12	1
55	H03-SOXA27014NN	JACK AC INLET AC05-4S020A	1
56	H03-ZMC12S19A00	BKT AC INLET	1
57	H03-SOXA2202DNN	JACK AC OUTLET A202D0031P 2P	1
58	H03-ZMD27S06A00	BKT VIDEO	1
59	H03-ZMD27S04A00	BKT FRAME GUIDE AVR745	1
60	H03-ZMD27HS0100	H/SINK AMP	1
61	H03-ZMC12S09A00	BKT HEATSINK	5
62	H03-SOPA61M707G	JACK SPEAKER 6P SH061M707G GN BN TA GOLD METAL	1
63	H03-ZMD27HS0300	HEATSINK AMP SMALL	1

64	H03-SORA10003GN	JACK RCA 1P JE010003SG GND YELLOW	1
65	SOPA96063NN	JACK D-SUB 9P 87204-6063 W/DUST COVER BK	1
66	H03-SOJW2350SNN	JACK PHONE 3.5 EP-1401A	6 OR 5
67	H03-ZMC12S16A00	BKT GROUND	1
68	H03-ZMC11S10A00	BKT FAN REAR	1
69	H03-SOYKF457009	JACKI HDMI YKF45-7009	3
70	H03-SOR12BJ12GN	JACK RCA 12P BJ120154JG R4 BU4 G4	1
71	H03-SORA60031GN	JACK RCA+S-VIDEO 6P C80300312G	2
72	H03-ZMD27S02A00	PANEL REAR AVR745US	1
73	H03-SOUSB45810B	JACK R41-5810B (Mitsumi) XM/DT connector	1
74	H03-SOUSB5005K0	JACK USB 5P AU6-EC-005K0	1
75	H03-SOTX22073GN	JACK RCA+ OPTICAL TX YKC22-0732N	1
76	H03-SORX22073GN	JACK RCA+ OPTICAL RX YKC22-0733N	3
77	H03-SORA40RSAGN	JACK RCA 4P JB040131ZG GN BN PP TA	2
78	H03-SORA40RSCGN	JACK RCA 4P JB040131QG WH BU RD GY	2
79	H03-ZMD27S05A00	BKT IPOD	1
80	H03-SO1R018H91E	JACK IPOD DA1R018H91E	1
81	H03-SORA1J440GE	JACK RCA 1P PPJ-440FEG PP	1
82	H03-SORA64105GN	JACK RCA 6P JB060132PG WWWRRR	3
83	H03-ZVC11TUNE01	TUNER MODULE KST-MB011MW0-81 US	1
84	H03-ZMC11S04B00	BKT FRAME-GUIDE	1
85	ZMC12S13AYE	STANDOFF HEX M4x0.7 6x31.9H	2
86	SO0A18P8CNN	JACK MODULAR GDL1-8P8C 8T BK	1
87	H03-SOPA81M367G	JACK SPEAKER 8P GOLD METAL SH081M367G GY BU RD WH	1
89	H03-ZMD27HS0400	HEATSINK REG. TR 68X20X50	1
90	ZFNR13830SB	RUBER SIDE 50x22x3	6
91	H03-ZMC12S07A00	COVER BOTTOM	1
92	ZUC1201AABK	SPONGE 30X30X10T BK	3
93	H03-ZMD2701ZANI	BKT POSISTOR	1
94	H03-ZMD12S01C00	SHIELD DSP AVR745	1
95	---	BKT HDMI C3	1
96	---	KNOB CORK	14
97	H03-ZMD27S07A00	SHIELD AL	1
98	H03-ZUD0301AABK	SPONGE UL 30X30X12T	1
99		BKT XM	1
SW	H03-SWC2A112FS1	SWITCH TACT SKQNADD010 12V 50mA	20
N1	ZNSSM4045HZ	NUT M4 HEXAGON CIRCULAR EXTERNAL	4
N2	ZNSSM3023HZ	NUT M3 ZN PLATED	1
S1	ZSTBM3010BB	SCREW ST BH 3X10	64
S2	ZSTWM3008BY	SCREW ST WPH 3X8	49
S3	ZSMCM4010BB	SCREW BM 4X10	4
S4	ZSTWM4008BC	SCREW ST WPH 4X8 SILVER CHROM	12
S5	ZSTWM3006BB	SCREW ST WPH 3X6	7
S7	ZSTBM3012BY	SCREW ST BH 3X12 PIVOT	36
S8	ZSMCM4008BY	SCREW BM 4X8	3
S9	ZSMBM3014BZ	SCREW M.S M3X14 ZN PLATED	1
S10	ZSMPM3006LB	SCREW BM 3X10 B	3
S11	ZSTBM3008BY	SCREW ST BH 3X8	1
S12	ZSTBM3014BY	SCREW ST BH 3X14 PIVOT	2
SG	ZSTGM3010BB	SCREW ST BH 3X10 GROUND	46
W1	ZWM623108SZ	WASHER SPRING 3	39
W2	ZWM803305PZ	WASHER PLAIN 3	20
W3	ZWM763109SZ	WASHER SPRING 4	4
W4	ZWMC04810PZ	WASHER PLAIN 4	4

SERVICE PROCEDURE

ALIGNMENT PROCEDURES

1.MAIN AMP idling Adjustment

SET CONDITION

1) SEMI VOLUME POSITION at MAIN/SURROUND AMP Board
MAIN:VR71.VR72
SURROUND:VR73.VR74

NO Signal/No Load
AC Line Voltage:120V/60Hz.230V/50Hz

2) After turning on the unit keep it over than 25min (keep the power/Driver TR as normal temperature)
3) Adjust the voltage value of primary&secondary of wafer to be 25mV by rotating the semi volume of each channel to the right

CHANNEL	ADJUSTMENT	MEASUREMENT	VOLTAGE
FRONT-L CH	VR71	P817	23+/-2mV
FRONT-R CH	VR72	P805	23+/-2mV
SURROUND-L CH	VR73	P818	23+/-2mV
SURROUND-R CH	VR74	P806	23+/-2mV

4) CAUTION
In case that power TR or DRIVER TR is needed to be replace for repairing the corresponding channel should be adjusted again

FRONT AMP:Q437.Q433.Q435.Q439.Q438.Q434.Q436.Q440
SURROUND AMP:Q333.Q329.Q331.Q335.Q334.Q330.Q332.Q336

2.SURROUND BACK AMP idling Adjustment

SET CONDITION

1) SEMI VOLUME POSITION at CENTER/SURROUND BACK AMP Board
CENTER:VR501
SURROUND BACK:VR201.VR301

NO Signal/No Load
AC Line Voltage:120V/60Hz.230V/50Hz

2) After turning on the unit keep it over than 25min (keep the power/Driver TR as normal temperature)
3) Adjust the voltage value of primary&secondary of wafer to be 25mV by rotating the semi volume of each channel to the right

CHANNEL	ADJUSTMENT	MEASUREMENT	VOLTAGE
CENTER	VR501	P501	23+/-2mV
SURR BACK-L CH	VR201	P201	23+/-2mV
SURR BACK-R CH	VR301	P301	23+/-2mV

4) CAUTION
In case that power TR or DVIER TR is needed to be replace for repairing the corresponding channel should be adjusted again

CENTER AMP:Q519,Q517.Q516,Q518
SUR BACK AMP:Q319.Q317.Q316.Q318.Q219.Q217.Q216.Q218

3.Cautions for main adjustment

1) At MAIN/SUPPLY BOARD.use the below capacitor after discharging for sufficent time for preventing possible damage from electrical spark

MAIN	C571.C572	AVR745/645 15000/63V
BOARD	C571.C572	AVR445 12000/63V
SUPPLY	C201,C202	AVR745/645 10000/63V
BOARD	C201,C202	AVR445 8200/63V

2)The checking for MAIN/SUPPLY BOARD should have the discharging circuit discharge over 30sec.through(4R7Ohm 10W)resistor after push power sw off

Allignmnent and test position (MAIN AMP BOARD)

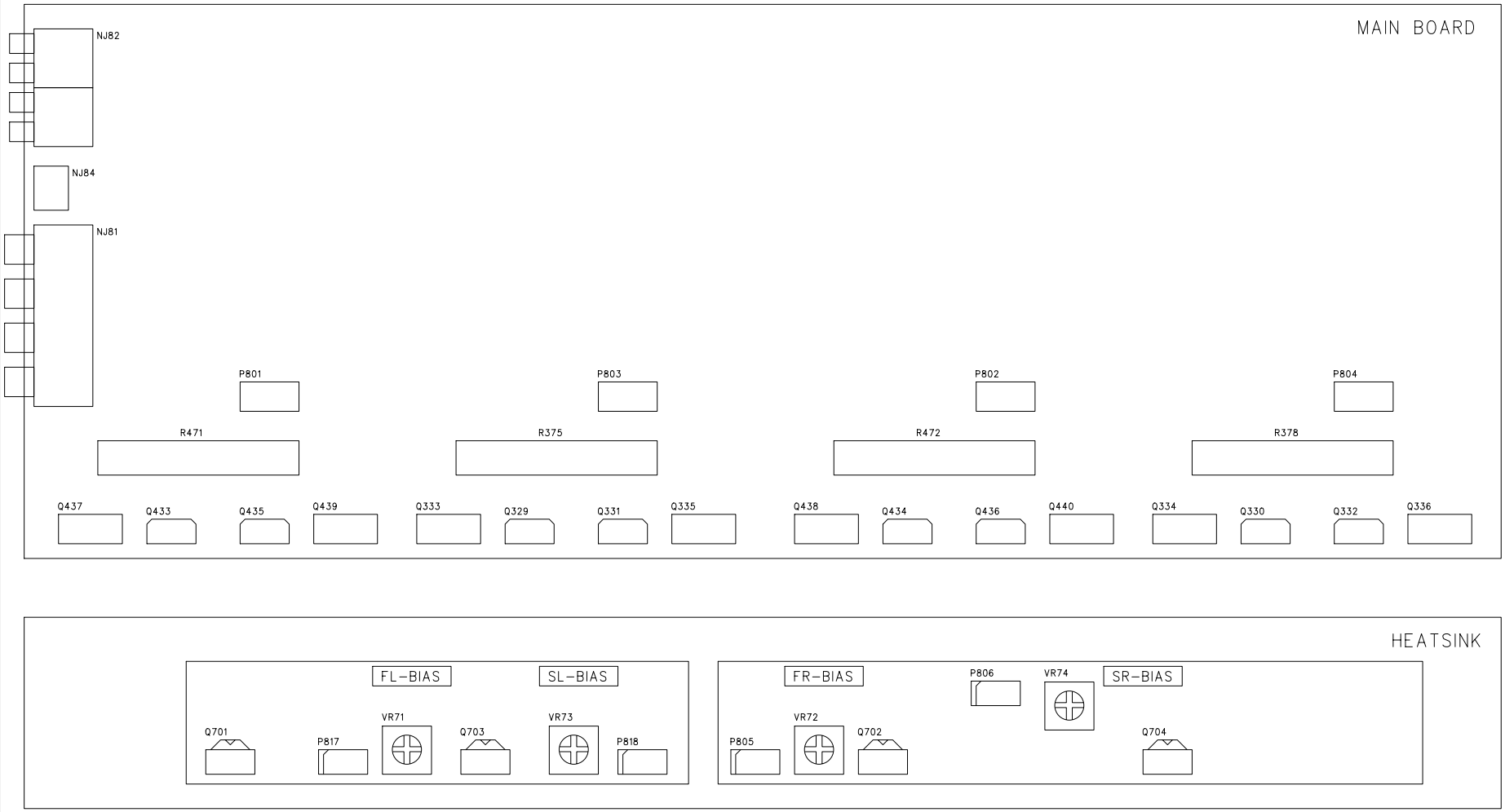

Allignmnent and test position (SURROUND BOARD)

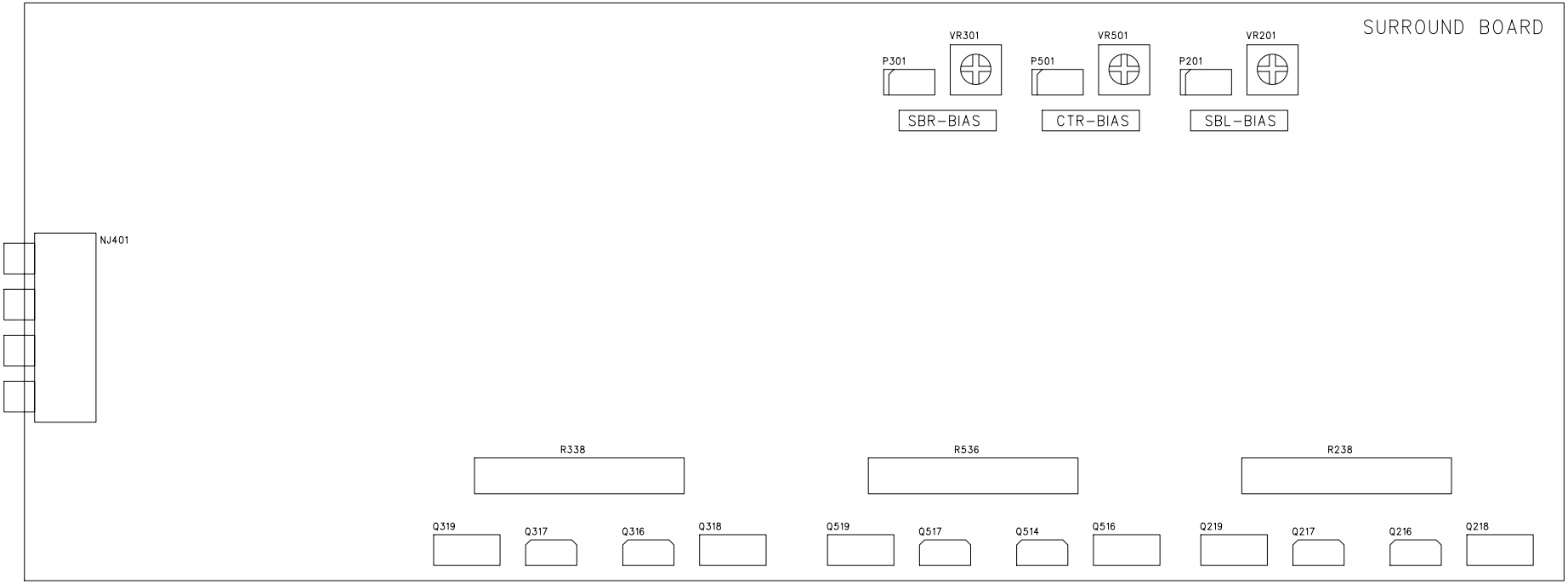

AVR745-CIRCUIT DESCRIPTION

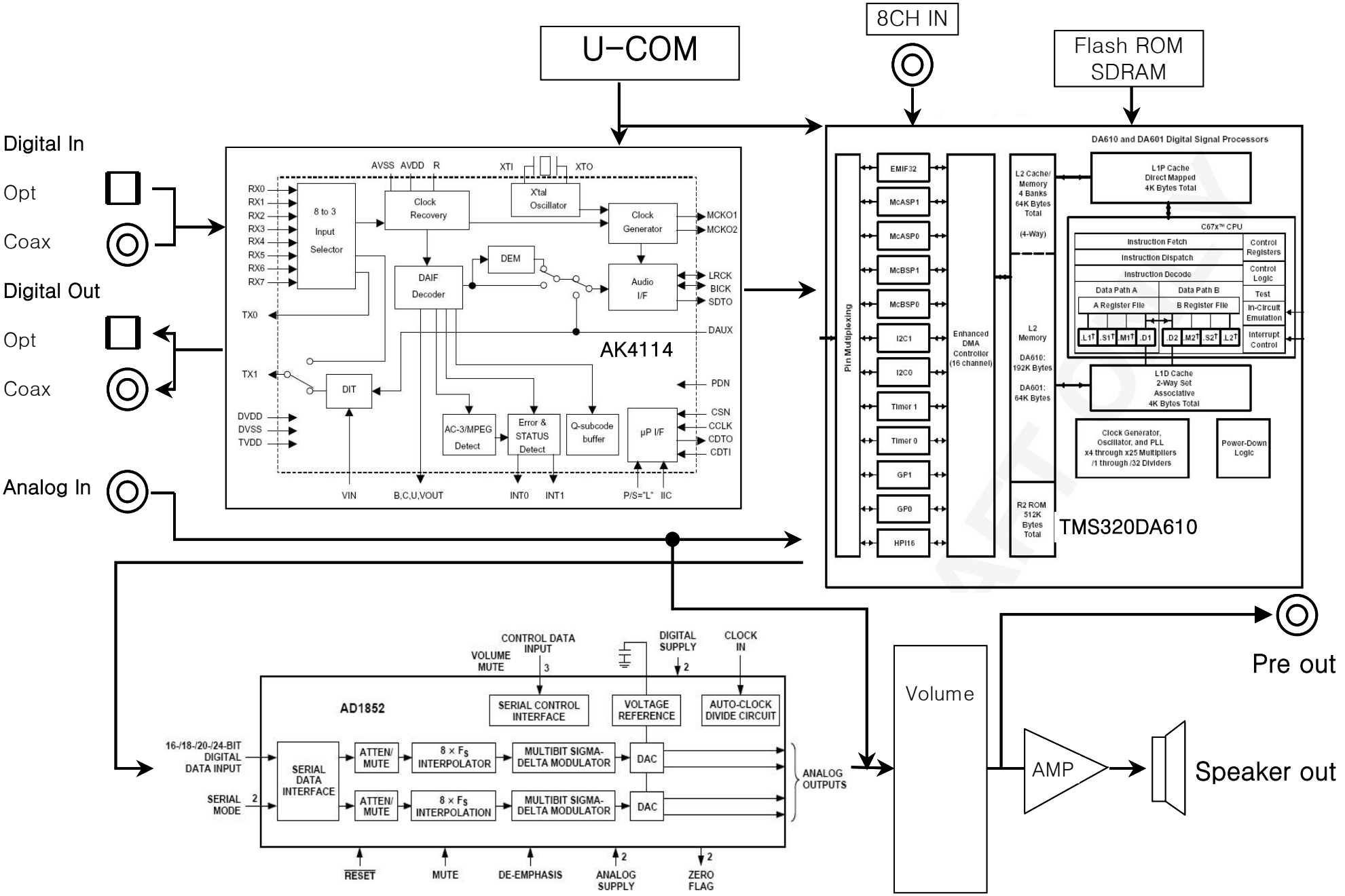

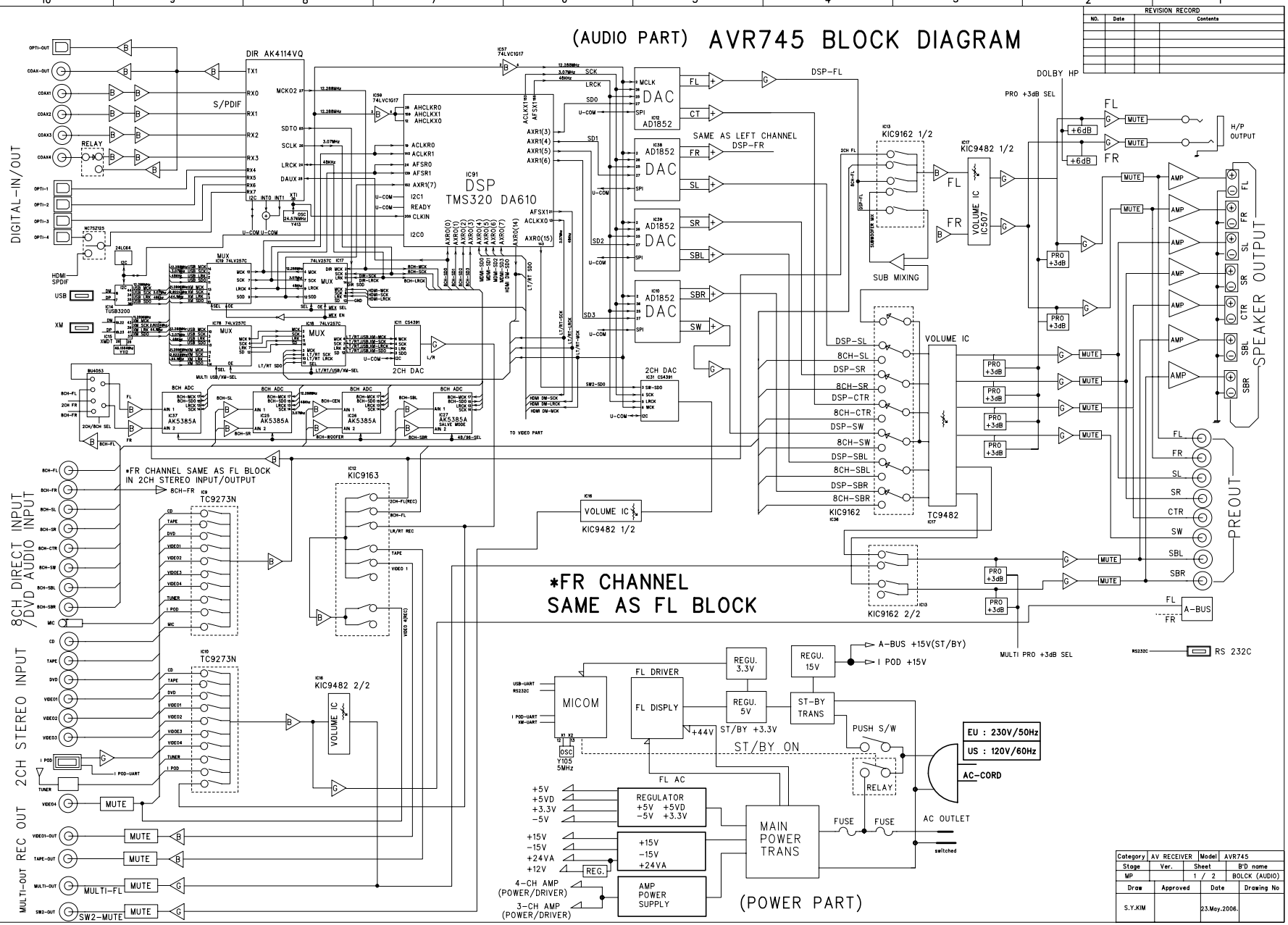
(AUDIO PART) AVR745 BLOCK DIAGRAM
REVISION RECORD
NO. Date Contents
DIGITAL-IN/OUT
DIR AK4114VQ
S/PDIF
RELAY
DSP
TMS320 DA610
DAC
AD1852
SAME AS LEFT CHANNEL
DSP-FR
DSP-FL
DOLBY HP
PRO +3dB SEL
H/P OUTPUT
KIC9162 1/2
KIC9482 1/2
VOLUME IC
IC507
SUB MIXING
SPEAKER OUTPUT
PREOUT
2CH DAC
AK5385A
TO VIDEO PART
*FR CHANNEL SAME AS FL BLOCK IN 2CH STEREO INPUT/OUTPUT
8CH DIRECT INPUT /DVD AUDIO INPUT
TC9273N
KIC9163
KIC9482 2/2
KIC9162
TC9482
KIC9162 2/2
*FR CHANNEL
SAME AS FL BLOCK
A-BUS
MULTI PRO +3dB SEL
RS 232C
2CH STEREO INPUT
MULTI-OUT REC OUT
MUTE
MULTI-FL
SW2-MUTE
MICOM
FL DRIVER
FL DISPLY
REGU. 3.3V
REGU. 5V
REGU. 15V
ST-BY TRANS
A-BUS +15V(ST/BY)
I POD +15V
ST/BY +3.3V
ST/BY ON
PUSH S/W
RELAY
EU : 230V/50Hz
US : 120V/60Hz
AC-CORD
FL AC
REGULATOR
+5V +5VD
-5V +3.3V
+15V
-15V
+24VA
+12V
REG.
4-CH AMP (POWER/DRIVER)
3-CH AMP (POWER/DRIVER)
AMP POWER SUPPLY
MAIN POWER TRANS
FUSE
AC OUTLET
switched
(POWER PART)
Category AV RECEIVER Model AVR745
Stage Ver. Sheet B'D name
MP 1 / 2 BOLCK (AUDIO)
Draw Approved Date Drawing No
S.Y.KIM 23.May.2006.

AVR745 BLOCK DIAGRAM of VIDEO PART

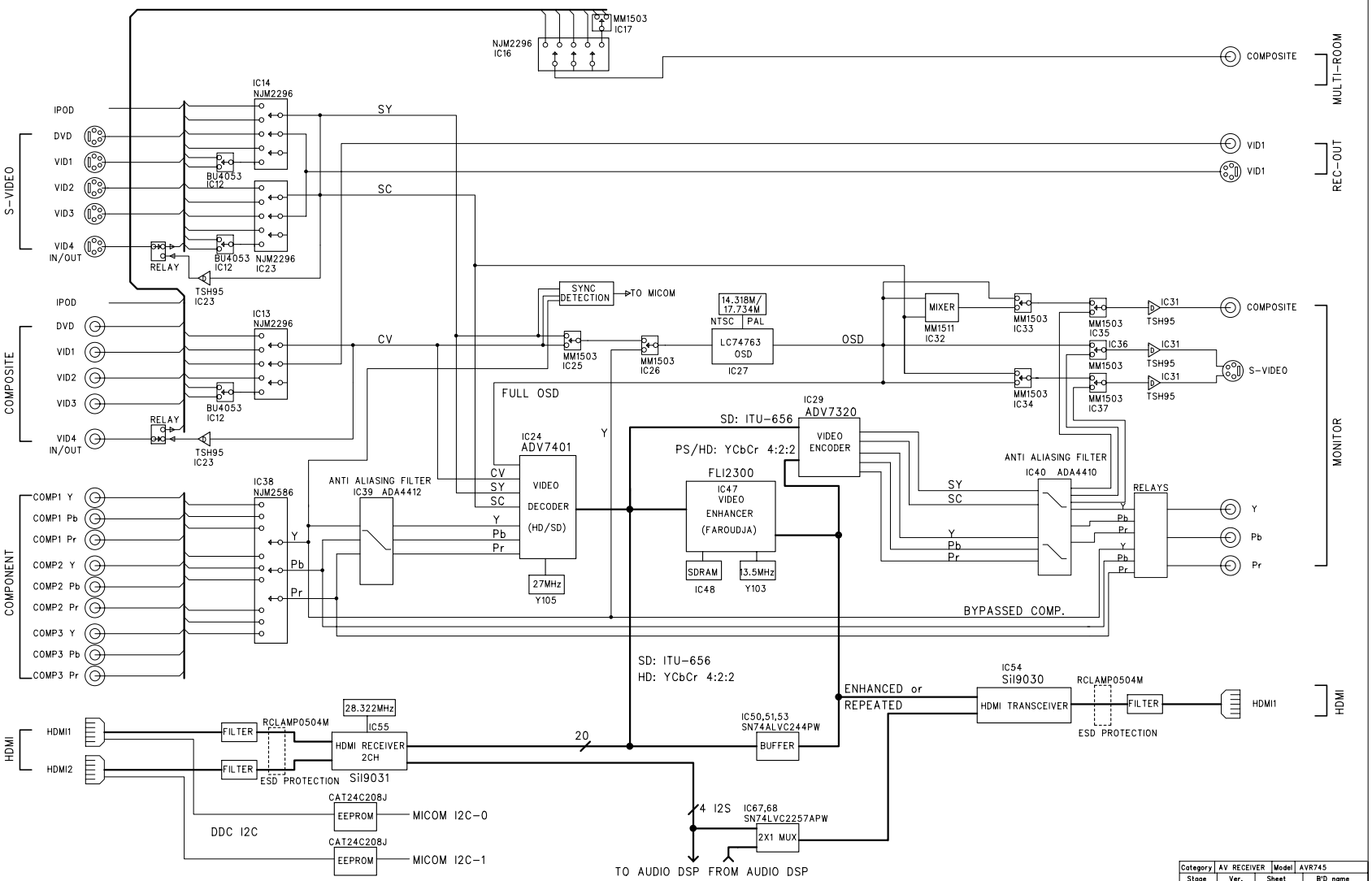

UPD70F3261YGC-8EA-A LQFP100 PORT DEFINE FOR AVR745

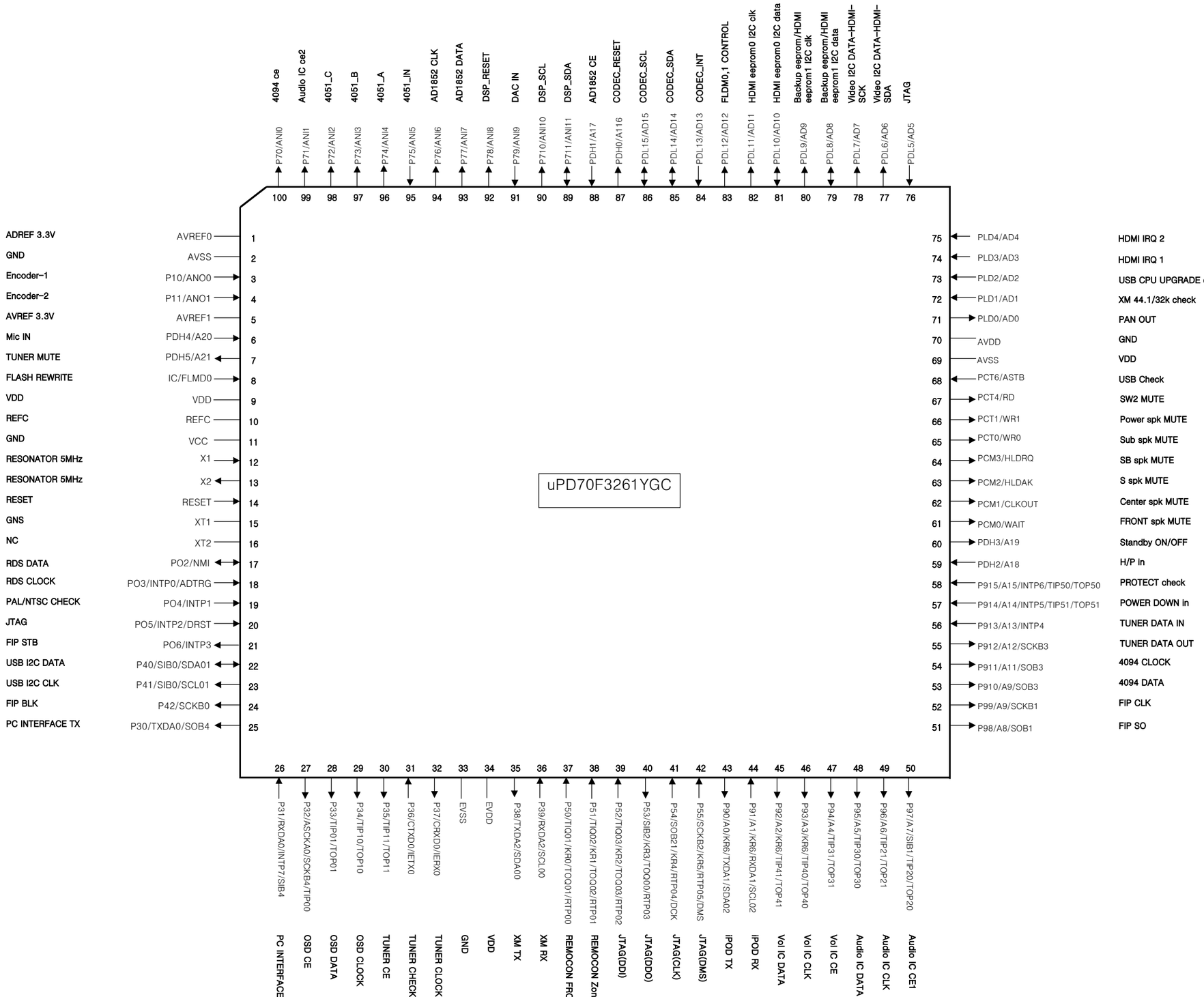

AVR745 MICOM PORT ASSIGN

PIN	PIN NAME	RECEVIER NAME	IN/OUT	FUNCTION
1	AV_{REF0}	3.3V	Supply	AD ref
2	AV_{SS}	GND	Supply	GND
3	P10/ANO0	Encoder 1	IN	VOLUME ENCODER INPUT 1
4	P11/ANO1	Encoder 2	IN	VOLUME ENCODER INPUT 2
5	AV_{REF1}	AVREF1	Supply	VDD
6	PDH4/A20	Mic in	IN	ROOM EQ mic in check
7	PDH5/A21	Tuner Mute	OUT	TUNER MUTE OUT
8	IC/FLMD0	Flash Rewrite	IC	Debug port
9	V_{DD}	VDD	Supply	VDD
10	REGC	REFC	Supply	VDD
11	V_{SS}	GND	Supply	GND
12	X1	RESONATOR 5MHz	IN	5.00MHz RESONATOR
13	X2	RESONATOR 5MHz	OUT	5.00MHz RESONATOR
14	/RESET	RESET	IN	LOW ACTIVE
15	XT1	GNS	GND	clock port
16	XT2	NC	Open	NC
17	P02/NMI	RDS DATA(XM-IRQ)	IN/OUT	RDS_DATA (ext interrupt)
18	P03/INTP0/ADTRG	RDS Clock(XM-C/D)	IN	RDS_CLK (ext interrupt)
19	P04/INTP1	PAL/NTSC check	IN	ext interrupt
20	P05/INTP2/DRST	JTAG(DRST)	IN	Debug port
21	P06/INTP3	FIP STB	OUT	FIP DRIVER IC RESET / FL STROBE
22	P40/SIB0/SDA01	USB I2C DATA	IN/OUT	USB-SDA
23	P41/SOB0/SCL01	USB I2C CLK	OUT	USB-CLK
24	P42/SCKB0	FIP BLK	OUT	FIP DRIVER IC DATA IN / FL BLANK
25	P30/TXDA0/SOB4	PC INTERFACE TX	OUT	UART Interface
26	P31/RXDA0/INTP7/SIB4	PC INTERFACE RX	IN	UART Interface
27	P32/ASCKA0/SCKB4/TIP00	OSD CE	OUT	OSD CHIP ENABLE
28	P33/TIP01/TOP01	OSC DATA	OUT	OSD DATA
29	P34/TIP10/TOP10	OSD CLOCK	OUT	OSD CLK
30	P35/TIP11/TOP11	Tuner CE	OUT	TUNER PLL IC(LC72131) CHIP ENABLE
31	P36/CTXD0/IETX0	Tuned check	IN	TUNER PLL IC(LC72131) DATA IN / STEREO CHECK
32	P37/CRXD0/IERX0	Tuner CLOCK	OUT	TUNER PLL IC(LC72131) CLOCK
33	EV_{SS}	GND	Supply	GND
34	EV_{DD}	VDD	Supply	VDD
35	P38/TXDA2/SDA00	XM TX	OUT	UART Interface
36	P39/RXDA2/SCL00	XM RX	IN	UART Interface
37	P50/TIQ01/KR0/TOQ01/RTP00	Remocon Front	IN	Remocon Port
38	P51/TIQ02/KR1/TOQ02/RTP01	Remocon Zone	IN	Remocon Port
39	P52/TIQ03/KR2/TOQ03/RTP02	JTAG(DDI)	IN	Debug port
40	P53/SIB2/KR3/TOQ00/RTP03	JTAG(DDO)	OUT	Debug port
41	P54/SOB2/KR4/RTP04/DCK	JTAG(CLK)	IN	Debug port
42	P55/SCKB2/KR5/RTP05/DMS	JTAG(DMS)	IN	Debug port
43	P90/A0/KR6/TXDA1/SDA02	iPOD TX	OUT	UART Interface
44	P91/A1/RXDA1/SCL02	iPOD RX	IN	UART Interface
45	P92/A2/TIP41/TOP41	Vol IC DATA	OUT	TC9482/TC9459 DATA
46	P93/A3/TIP40/TOP40	Vol IC CLOCK	OUT	TC9482/TC9459 CLK
47	P94/A4/TIP31/TOP31	Vol IC CE	OUT	TC9482/TC9459 CE
48	P95/A5/TIP30/TOP30	Audio IC data	OUT	A DATA
49	P96/A6/TIP21/TOP21	Audio IC clk	OUT	A CLK
50	P97/A7/SIB1/TIP20/TOP20	Audio IC ce 1	OUT	TC9273/TC9162/TC9163 CE
51	P98/A8/SOB1	FIP SO	OUT	FIP DRIVER IC DATA OUT / FL DI
52	P99/A9/SCKB1	FIP CLK	OUT	FIP DRIVER IC CLOCK OUT / FL CLK
53	P910/A10/SIB3	4094 DATA	OUT	4094 DATA
54	P911/A11/SOB3	4094 CLOCK	OUT	4094 CLK
55	P912/A12/SCKB3	Tuner DATA out	OUT	72131 DIN
56	P913/A13/INTP4	Tuner DATA in	IN	72131 DOUT
57	P914/A14/INTP5/TIP51/TOP51	POWER DOWN check	IN	Ext Interrupt
58	P915/A15/INTP6/TIP50/TOP50	Protect check	IN	PROTECTION IN
59	PDH2/A18	H/P in	IN	HEADPHONE INPUT
60	PDH3/A19	Standby ON/OFF	OUT	MAIN POWER Relay control
61	PCM0/WAIT	Front spk Mute	OUT	FRONT SPEAKER MUTE
62	PCM1/CLKOUT	Cen spk Mute	OUT	CENTER SPEAKER MUTE
63	PCM2/HLDAK	S spk Mute	OUT	SURROUND SPAKER MUTE
64	PCM3/HLDRQ	SB spk Mute	OUT	SURR BACK SPEAKER MUTE
65	PCT0/WR0	Sub spk Mute	OUT	SUB WOOFER MUTE
66	PCT1/WR1	Power Mute	OUT	POWER MUTE
67	PCT4/RD	SW2 MUTE	OUT	SUBWOFER MUTE
68	PCT6/ASTB	USB CHECK	IN	USB CNT CHECK
69	BV_{SS}	VDD	Supply	VDD
70	BV_{DD}	GND	Supply	GND
71	PDL0/AD0	Fan Out	OUT	PWM control
72	PDL1/AD1	XM 44.1/32K CHECK	IN	XM-44.1/32K-CHECK
73	PDL2/AD2	USB CPU UPGRAD CHECK	IN	USB-UPGRADE
74	PDL3/AD3	HDMI IRQ 1	IN	HDMI IRQ 1
75	PDL4/AD4	HDMI IRQ 2	IN	HDMI IRQ 2

PIN	PIN NAME	RECEVIER NAME	IN/OUT	FUNCTION
76	PDL5/AD5/FLMD1	JTAG	IN	Debug port
77	PDL6/AD6	Video I2C DATA-HDMI-SDA	IN/OUT	farodja,HDMI i2c
78	PDL7/AD7	Video I2C CLK-HDMI-SCK	OUT	farodja,HDMI i2c
79	PDL8/AD8	backup eeprom/HDMI eeprom1 I2C data	IN/OUT	EEPROM DATA
80	PDL9/AD9	backup eeprom/HDMI eeprom1 I2C clk	OUT	EEPROM CLK
81	PDL10/AD10	HDMI eeprom0 I2C data	IN/OUT	EEPROM DATA
82	PDL11/AD11	HDMI eeprom0 I2C clkl	OUT	EEPROM CLK
83	PDL12/AD12	FLDM0,1 CONTROL	OUT	Flash programming mode
84	PDL13/AD13	CODEC_INT	IN	AK4114 INT0
85	PDL14/AD14	CODEC_SDA	IN/OUT	AK4114 SDA
86	PDL15/AD15	CODEC_SCL	IN/OUT	AK4114 SCL/CS4391A M2
87	PDH0/A16	CODEC_RESET	OUT	AK4114 PDN
88	PDH1/A17	AD1852 CE	IN	DAC CE
89	P711/ANI11	DSP_SDA	IN/OUT	DSP I2C DATA
90	P710/ANI10	DSP_SCL	OUT	DSP I2C CLOCK
91	P79/ANI9	DAC IN	IN	CS4391A M1
92	P78/ANI8	DSP_RESET	OUT	DA610 RESET
93	P77/ANI7	AD1852 DATA	OUT	DAC DATA
94	P76/ANI6	AD1852 CLK	OUT	DAC CLK
95	P75/ANI5	4051_IN	IN	4051_IN
96	P74/ANI4	4051_A	OUT	4051_A
97	P73/ANI3	4051_B	OUT	4051_B
98	P72/ANI2	4051_C	OUT	4051_C
99	P71/ANI1	Audio ic ce2	OUT	TC9162_CE
100	P70/ANI0	4094 ce	OUT	4094 CHIP ENABLE

Semiconductor pinout drawings

•IC

1. 24LC256 (DSP: IC53)

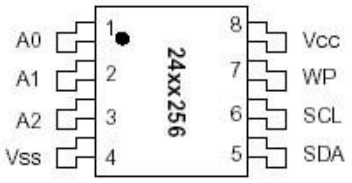

PIN FUNCTION TABLE

Name	Function
A0, A1, A2	User Configurable Chip Selects
Vss	Ground
SDA	Serial Data
SCL	Serial Clock
WP	Write Protect Input
Vcc	+1.8 to 5.5V (24AA256) +2.5 to 5.5V (24LC256)

BLOCK DIAGRAM

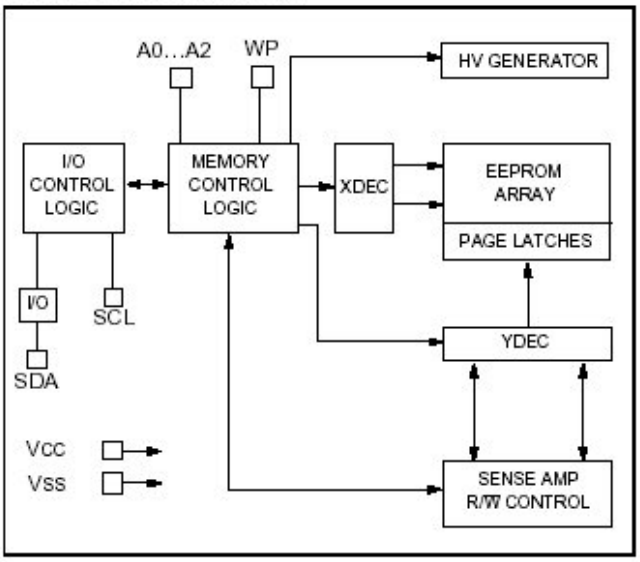

2. 24LC64-I/SNG (DSP: IC16)

Block Diagram

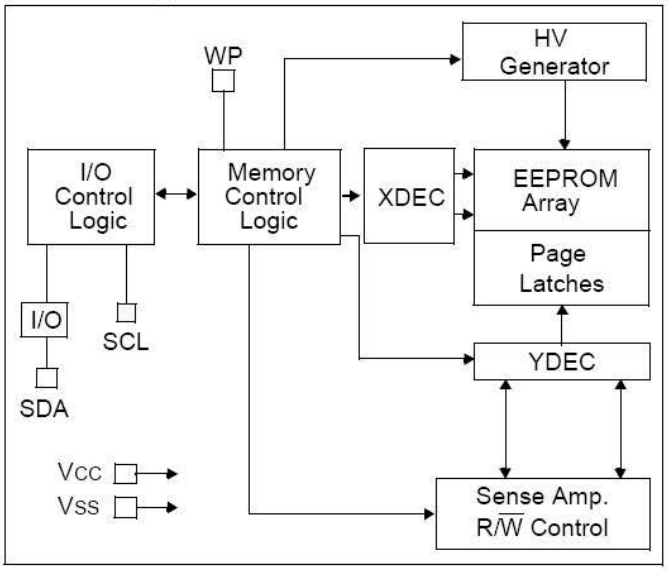

SOIC, TSSOP

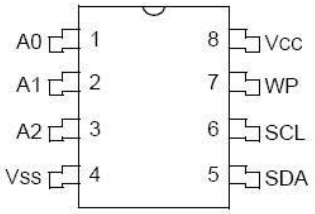

PIN FUNCTION TABLE

Name	Function
A0,A1,A2	User Configurable Chip Selects
Vss	Ground
SDA	Serial Data
SCL	Serial Clock
WP	Write Protect Input
Vcc	+1.8 to 5.5V (24AA64) +2.5 to 5.5V (24LC64)

3. 24LC08BT (VIDEO: IC43 IC46)

BLOCK DIAGRAM

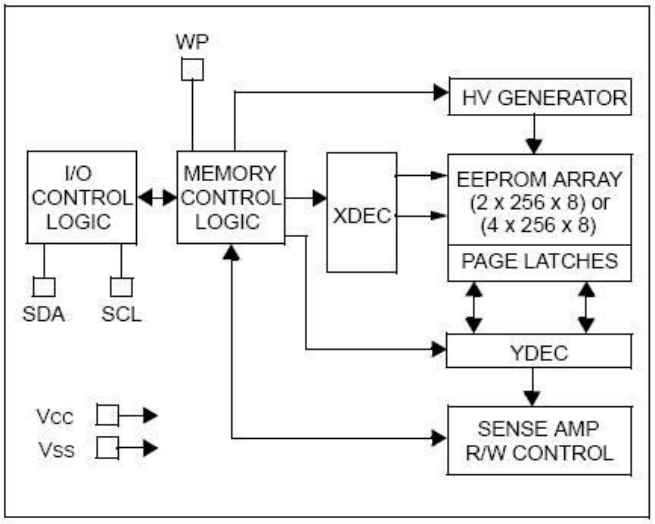

PDIP, SOIC

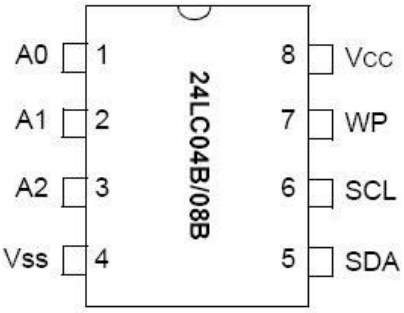

4. BU4094BCF SOP16 (DSP: IC23 IC24 IC28) (RS232: IC406) (VIDEO: IC18 IC19 1C20 IC21 IC22)

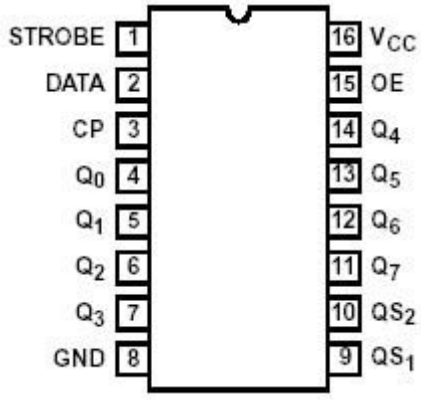

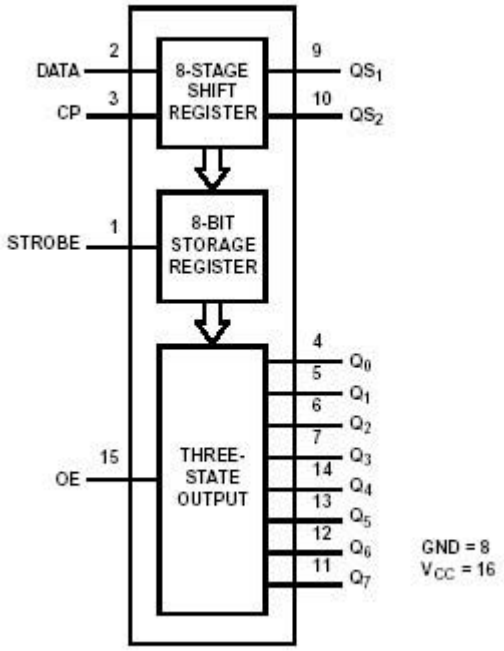

5. BU4051BCF SOP16 (DSP: IC21)

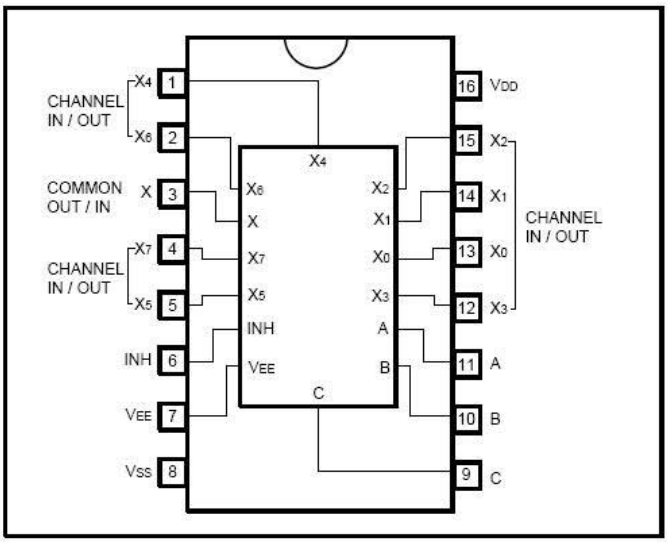

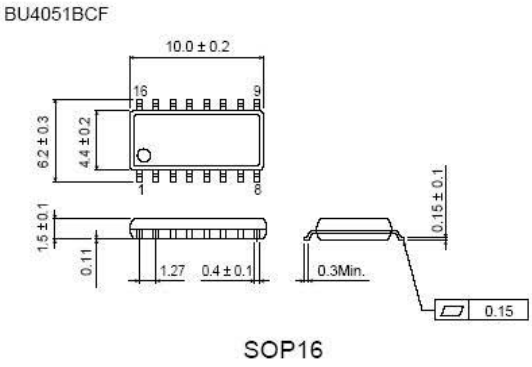

SOP16

6. BU4052BCF SOP16 (RS232: IC34)

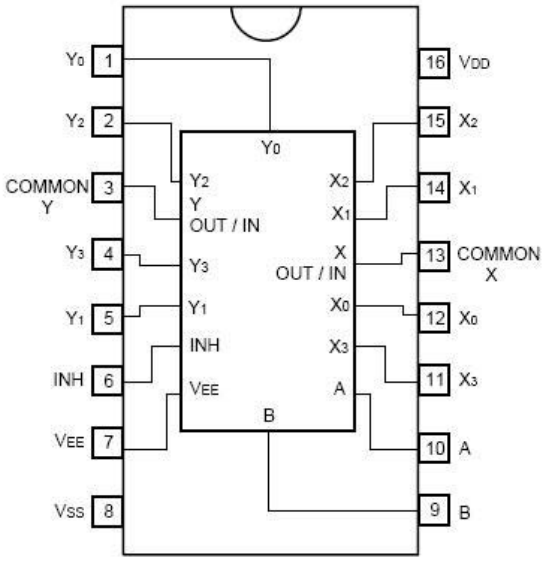

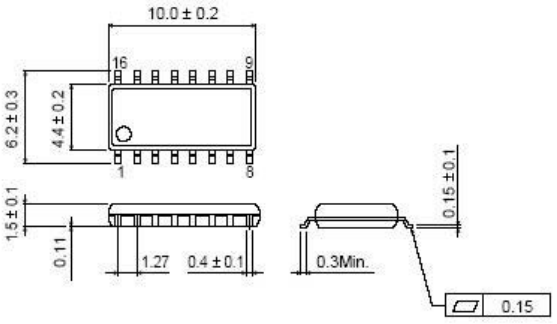

7. 74HCU04M (DSP: ICIC74 IC75)

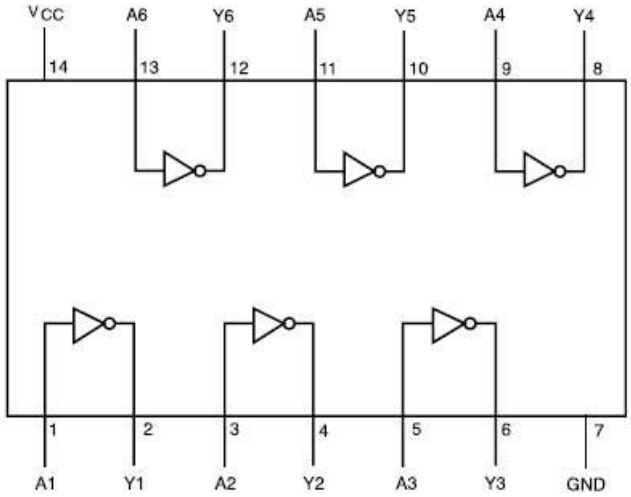

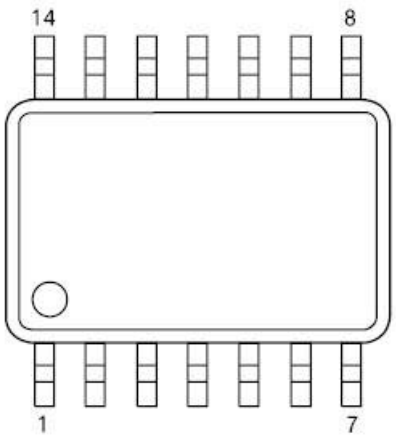

8. SN74ALVC244PWR (VIDEO: IC50 IC51 IC53)

LOGIC DIAGRAM (POSITIVE LOGIC)

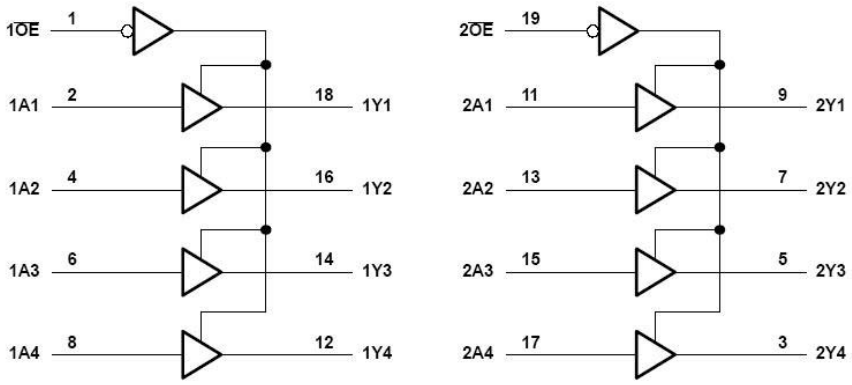

DIM \ PINS **	8	14	16	20	24	28
A MAX	3,10	5,10	5,10	6,60	7,90	9,80
A MIN	2,90	4,90	4,90	6,40	7,70	9,60

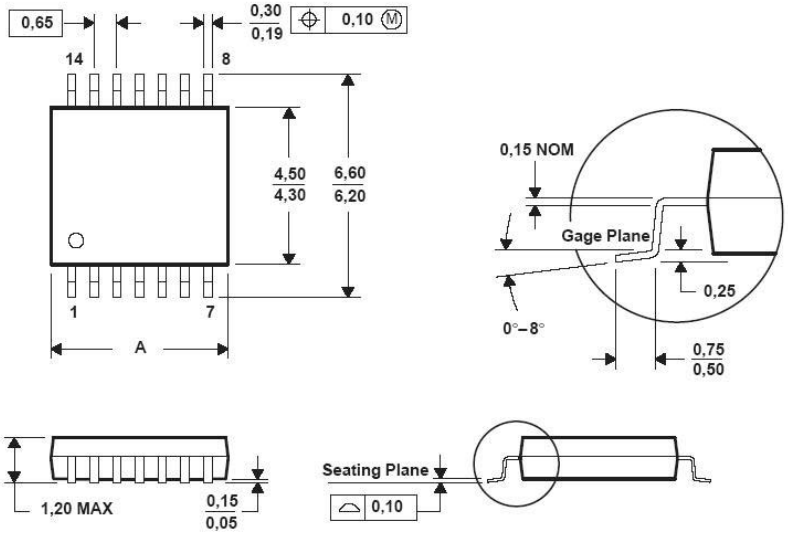

9. XMDIC QFP48 (DSP: IC15)

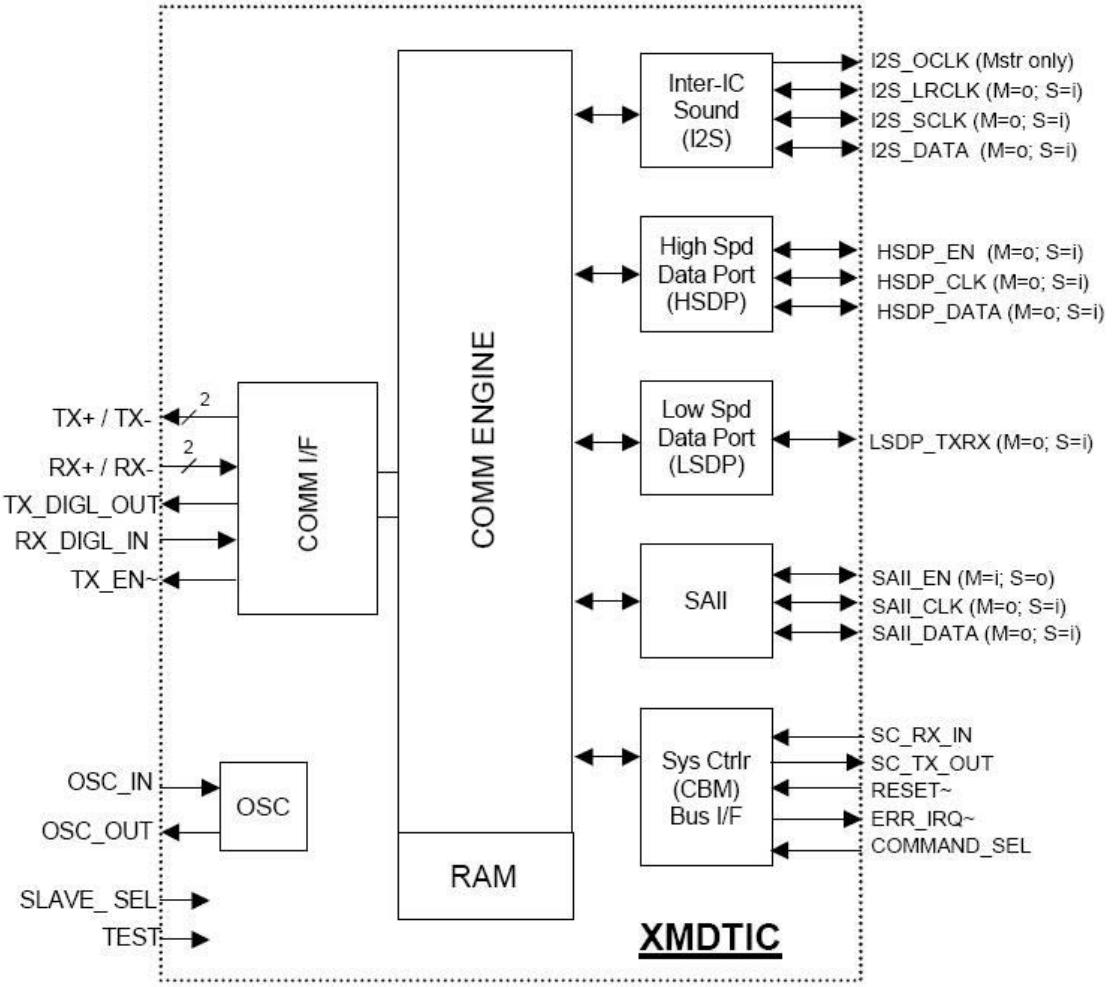

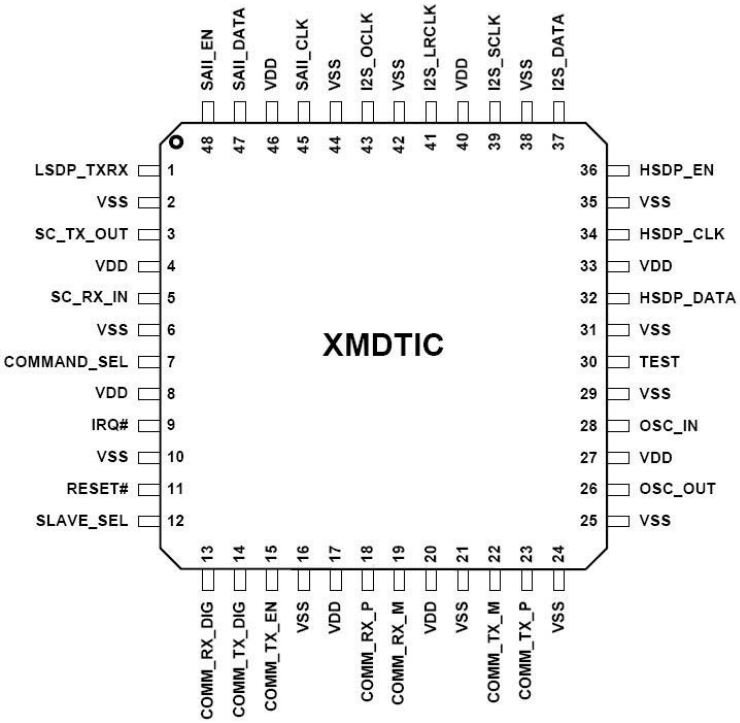

10. TMS320DA610-250 PQFP208 (DSP:IC91)

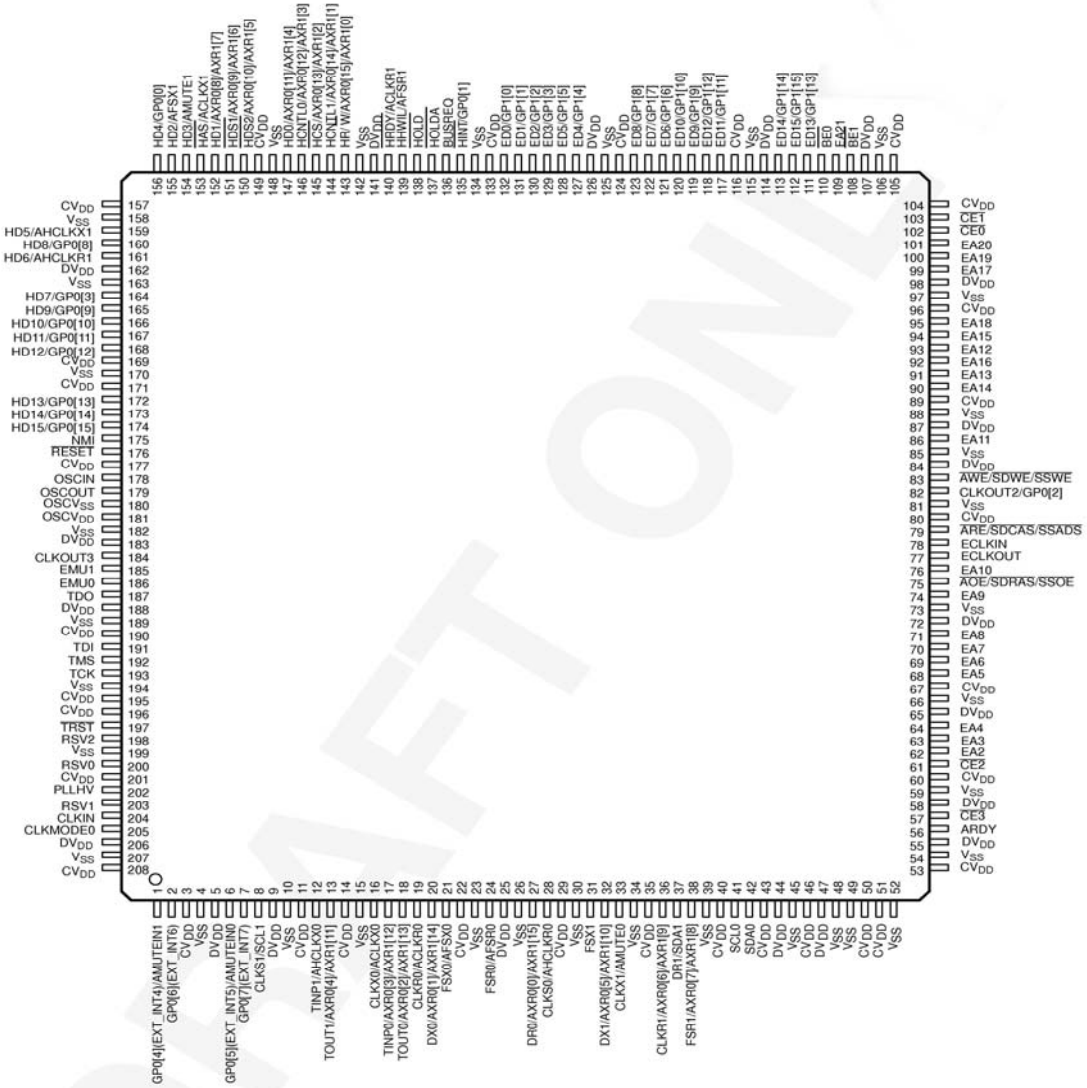

DRAFT ONLY

functional block and CPU (DSP core) diagram

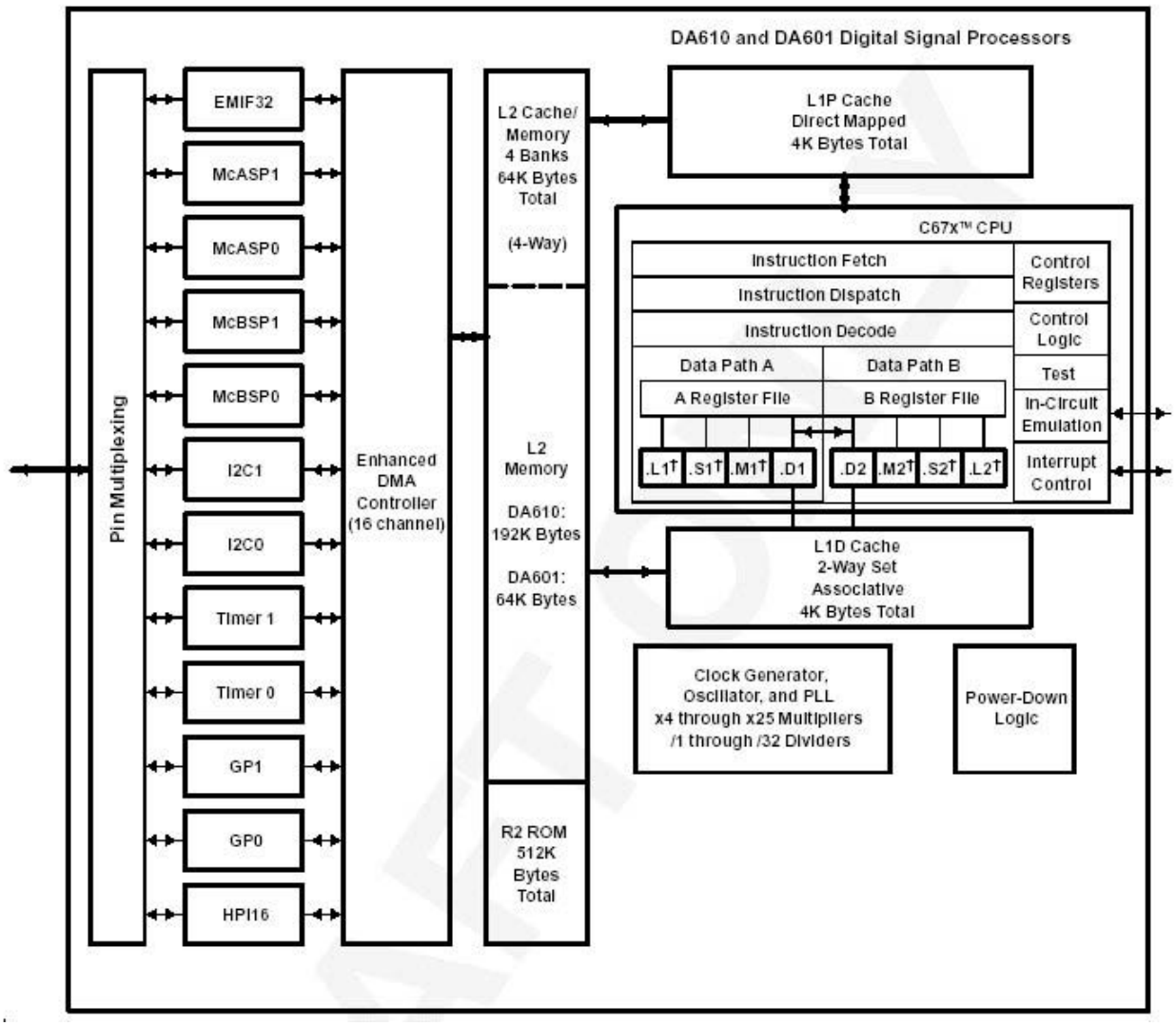

11. SN74LVC1G125DVB (DSP:IC51,52 VIDEO: IC67,68)

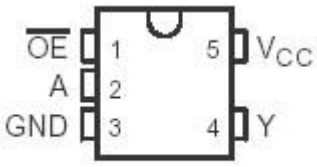

FUNCTION TABLE

INPUTS		OUTPUT
$\overline{OE}$	A	Y
L	H	H
L	L	L
H	X	Z

logic symbol†

logic diagram (positive logic)

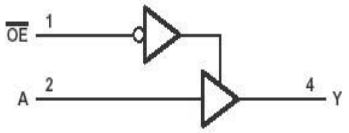

12. 74VHC244M (DSP:IC50)

M
(Micro Package)

PIN CONNECTION AND IEC LOGIC SYMBOLS

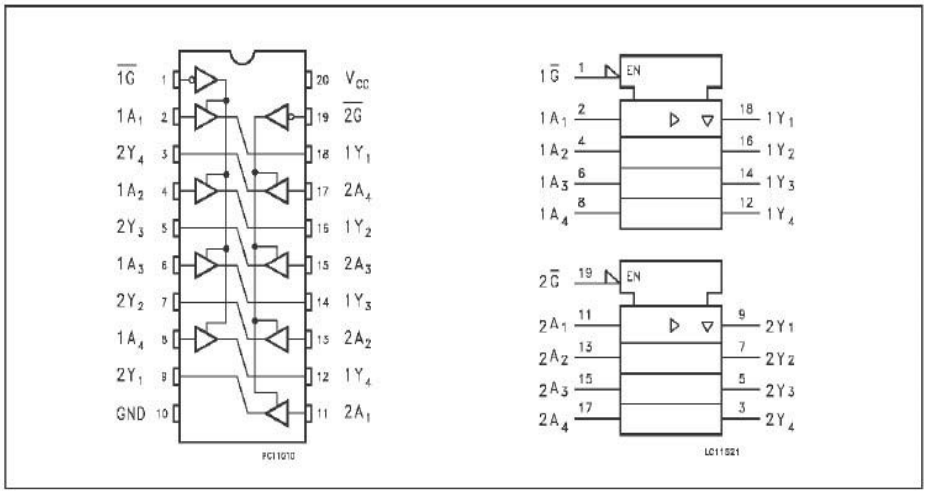

13. AT49BV163DT (DSP:IC92)

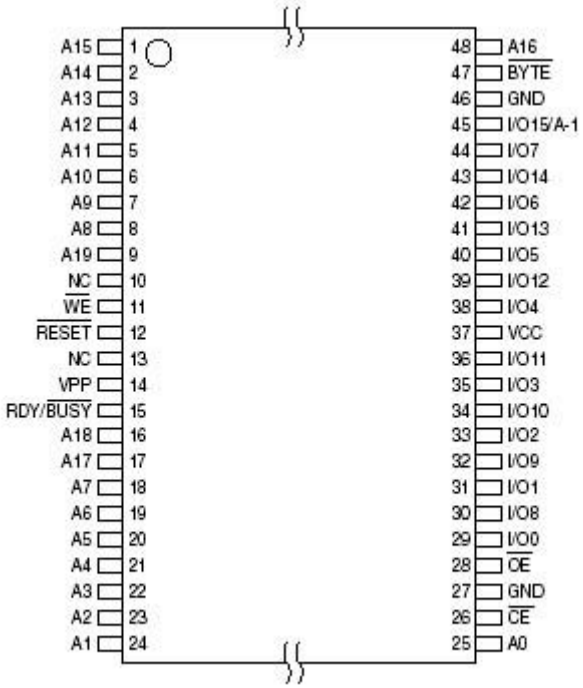

Block Diagram

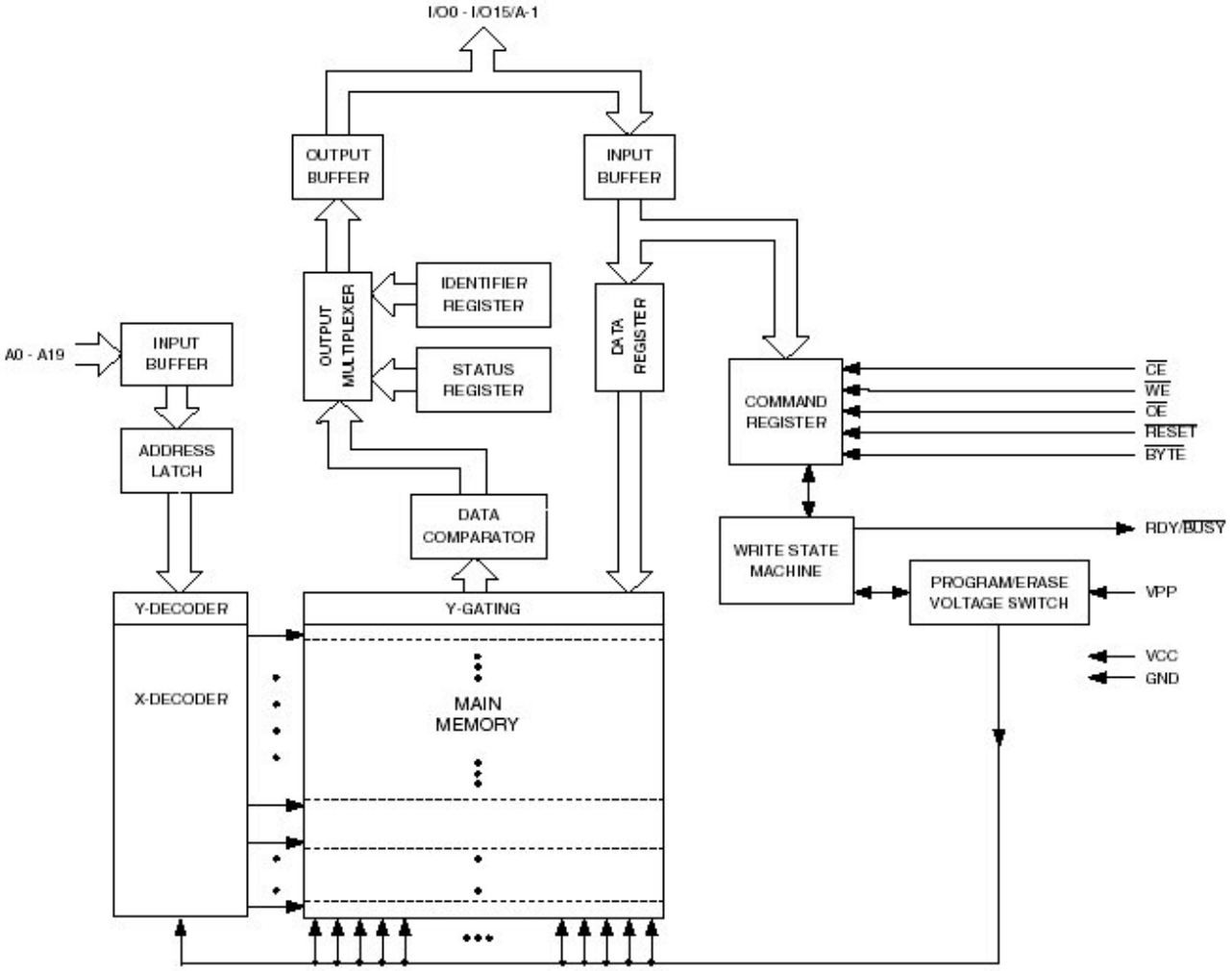

14. 74AHC1G (DSP: IC45)

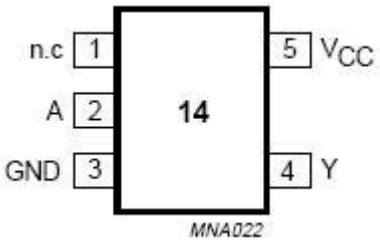

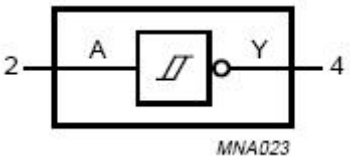

15. AK5385AVF (DSP: IC25 IC26 IC27 IC37)

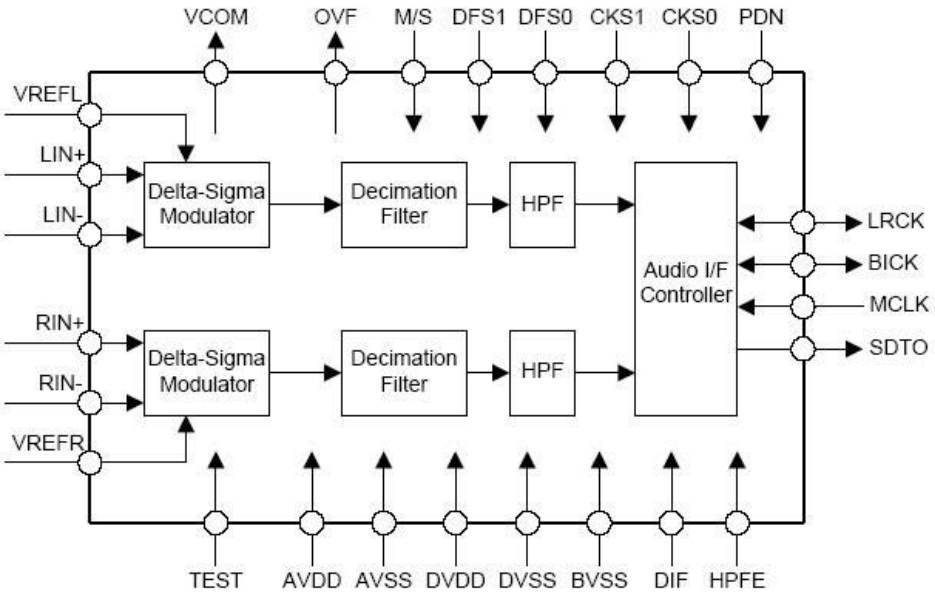

Block diagram

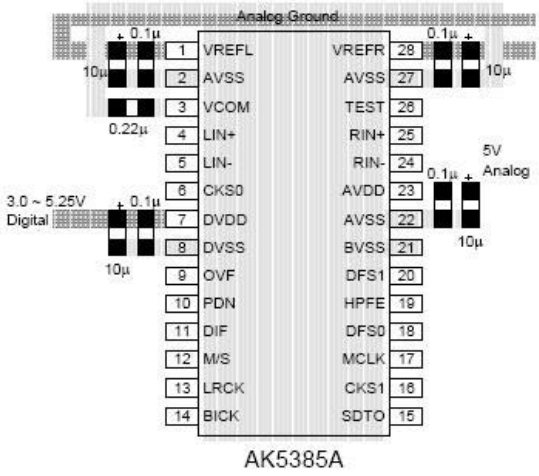

AK5385A

16. DS1233AZ (DSP: IC40)

BLOCK DIAGRAM Figure 1

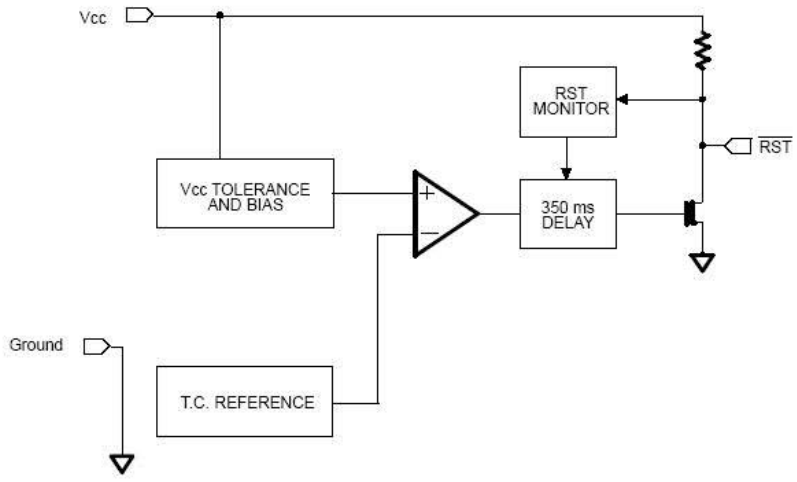

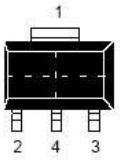

SOT–223 PACKAGE
See Mech. Drawings Section

PIN DESCRIPTION

PIN 1	GROUND
PIN 2	$\overline{\text{RESET}}$
PIN 3	V_{CC}
PIN 4	GROUND (SOT–223 ONLY)

17. BU4053BCF (DSP:IC23,24,28 VIDEO: IC12 IC42 IC45 IC59)

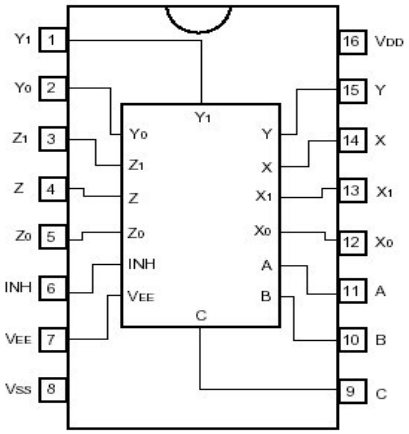

●Logic circuit diagram

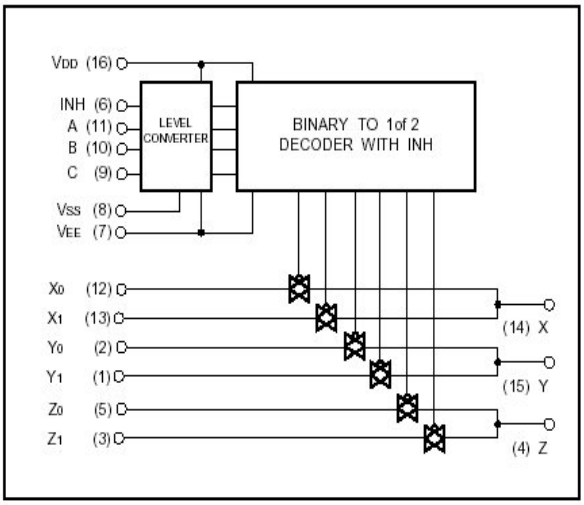

●Truth table

INH	A	B	C	ON SWITCH
L	L	L	L	X_0 Y_0 Z_0
L	H	L	L	X_1 Y_0 Z_0
L	L	H	L	X_0 Y_1 Z_0
L	H	H	L	X_1 Y_1 Z_0
L	L	L	H	X_0 Y_0 Z_1
L	H	L	H	X_1 Y_0 Z_1
L	L	H	H	X_0 Y_1 Z_1
L	H	H	H	X_1 Y_1 Z_1
H	X	X	X	NONE

X: Irrelevant

18. TUSB3200A (DSP: IC14)

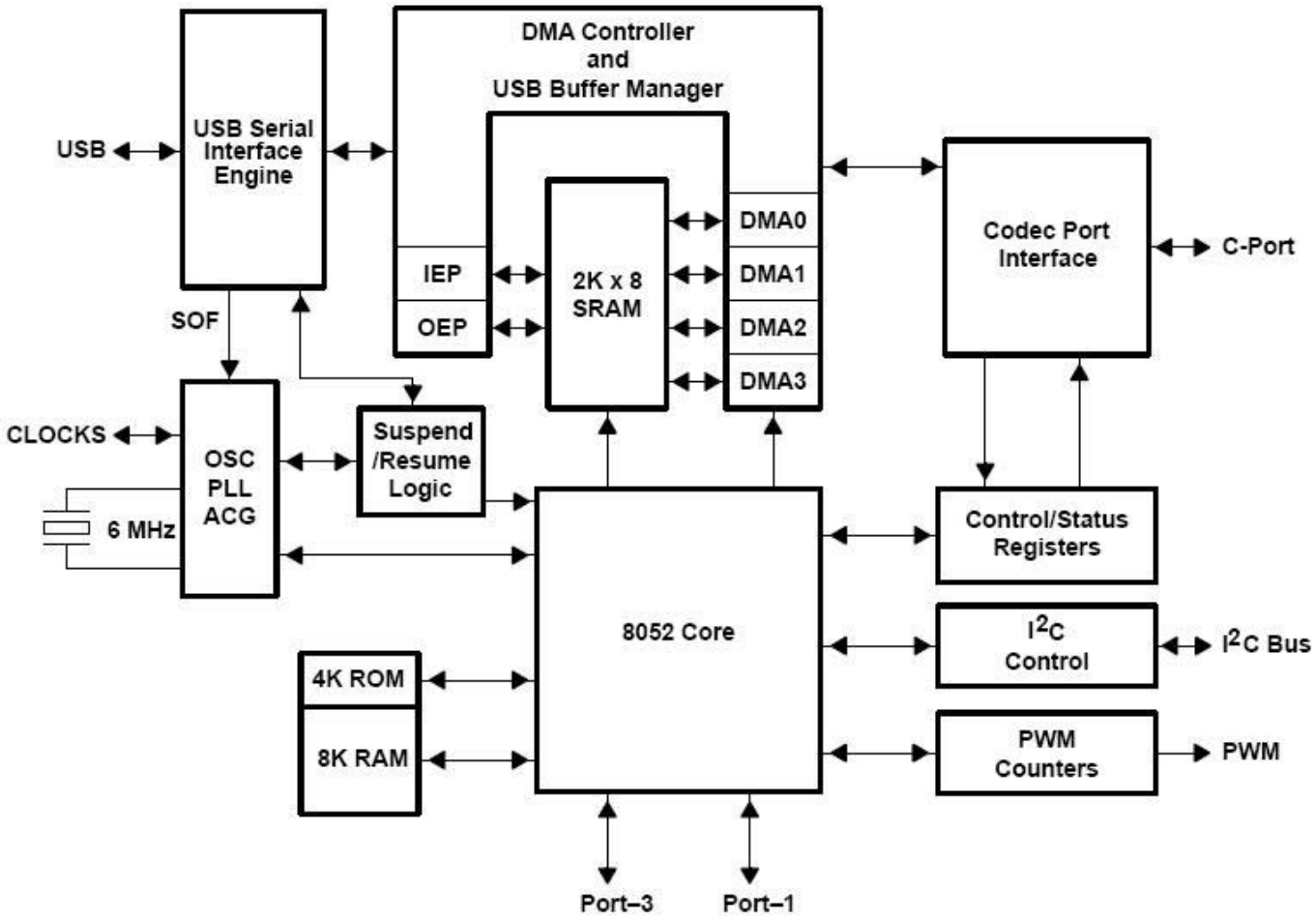

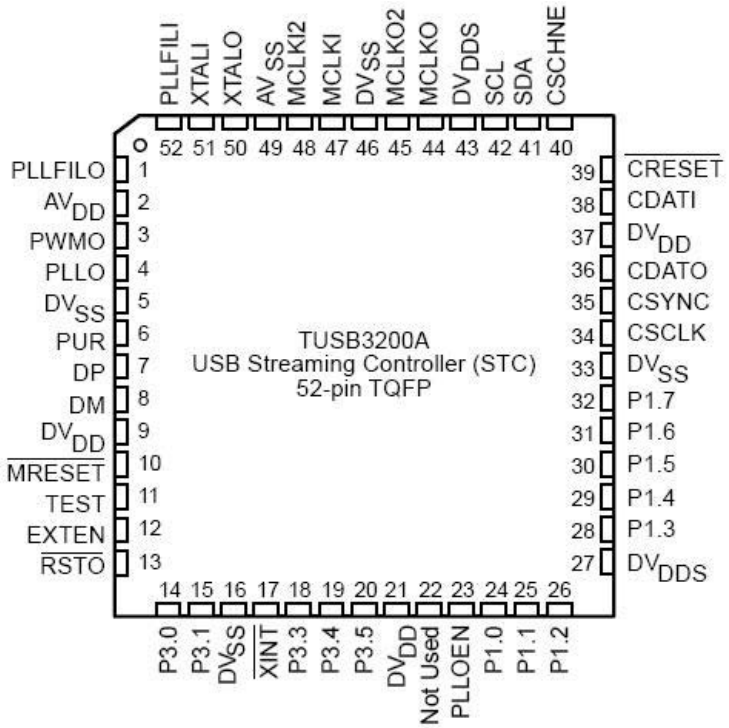

19. K4S161622H-UC60 (DSP:IC93)

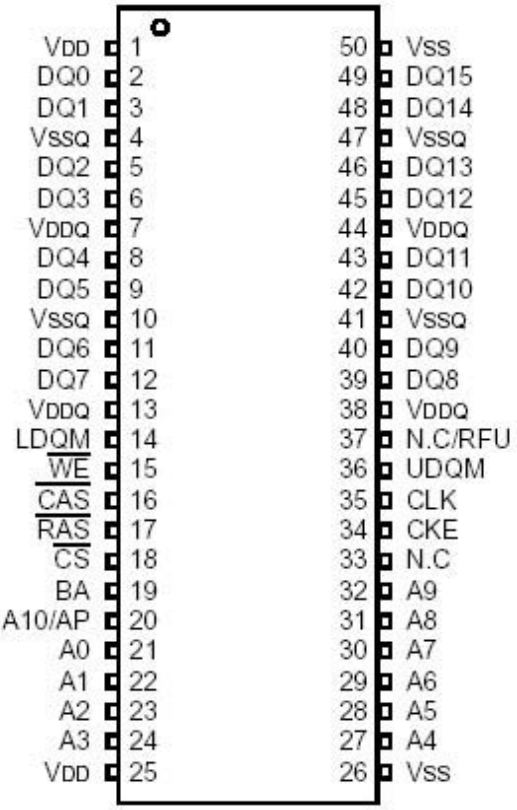

FUNCTIONAL BLOCK DIAGRAM

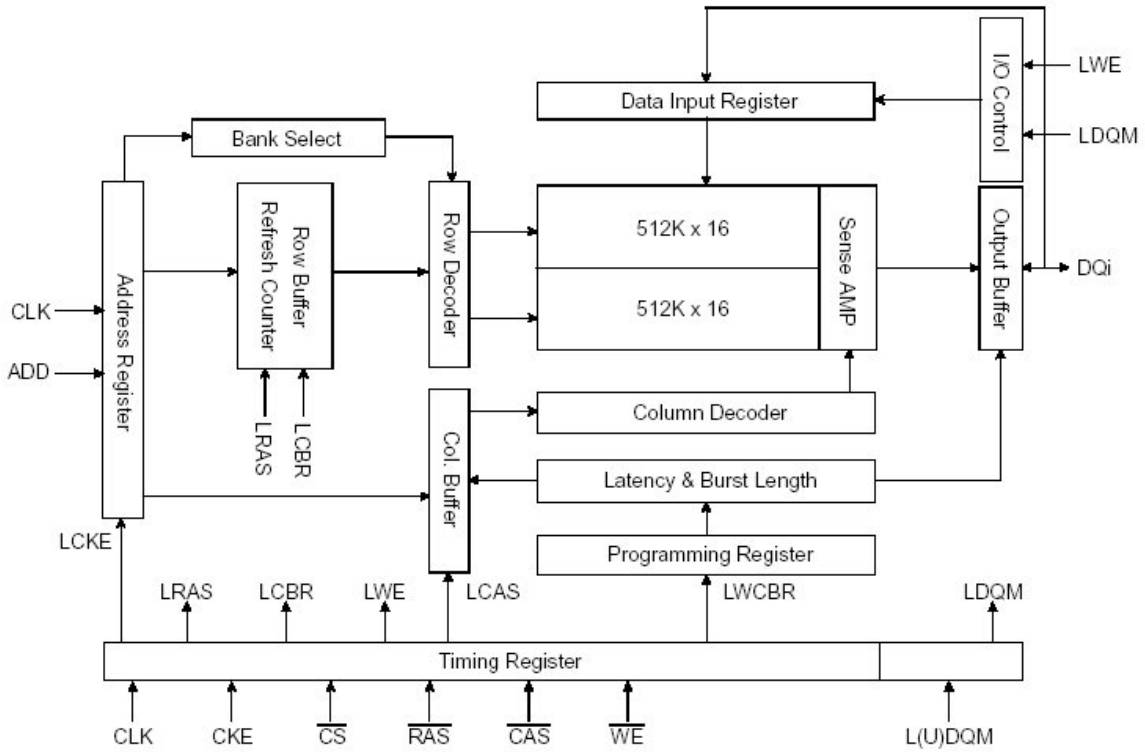

PIN FUNCTION DESCRIPTION

Pin	Name	Input Function
CLK	*System Clock*	Active on the positive going edge to sample all inputs.
$\overline{CS}$	*Chip Select*	Disables or enables device operation by masking or enabling all inputs except CLK, CKE and L(U)DQM
CKE	*Clock Enable*	Masks system clock to freeze operation from the next clock cycle. CKE should be enabled at least one cycle prior to new command. Disable input buffers for power down in standby.
A_0 ~ A_{10}/AP	*Address*	Row / column addresses are multiplexed on the same pins. Row address : RA_0 ~ RA_{10}, column address : CA_0 ~ CA_7
BA	*Bank Select Address*	Selects bank to be activated during row address latch time. Selects bank for read/write during column address latch time.
$\overline{RAS}$	*Row Address Strobe*	Latches row addresses on the positive going edge of the CLK with $\overline{RAS}$ low. Enables row access & precharge.
$\overline{CAS}$	*Column Address Strobe*	Latches column addresses on the positive going edge of the CLK with $\overline{CAS}$ low. Enables column access.
$\overline{WE}$	*Write Enable*	Enables write operation and row precharge. Latches data in starting from $\overline{CAS}$, $\overline{WE}$ active.
L(U)DQM	*Data Input/Output Mask*	Makes data output Hi-Z, t_{SHZ} after the clock and masks the output. Blocks data input when L(U)DQM active.
$DQ_{0 \sim 15}$	*Data Input/Output*	Data inputs/outputs are multiplexed on the same pins.
V_{DD}/V_{SS}	*Power Supply/Ground*	Power and ground for the input buffers and the core logic.
V_{DDQ}/V_{SSQ}	*Data Output Power/Ground*	Isolated power supply and ground for the output buffers to provide improved noise immunity.
N.C/RFU	*No Connection/ Reserved for Future Use*	This pin is recommended to be left No Connection on the device.

20. KIC9162CFG (DSP: IC36 PROCESSOR: IC15) KIC9163CFG (PROCESSOR: IC12)

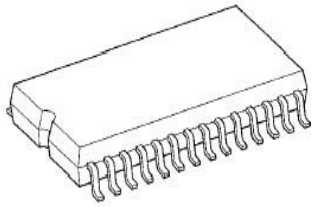

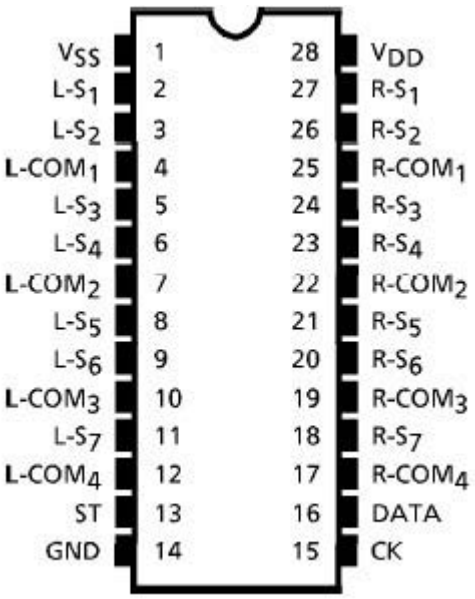

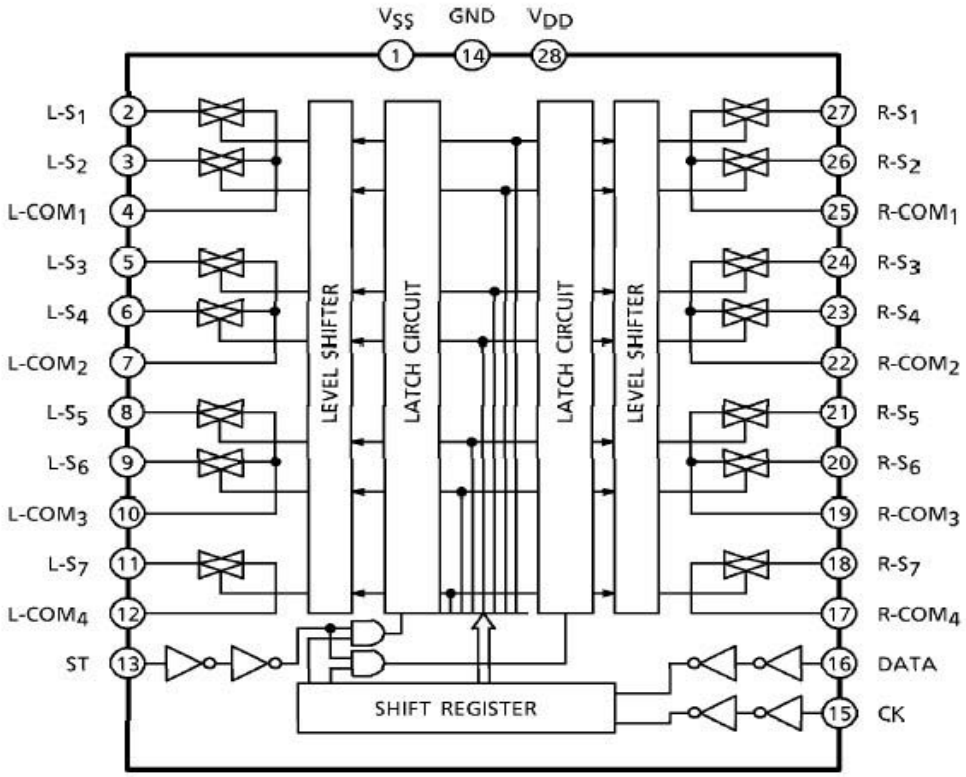

21. LC74763M (RS232: IC401 VIDEO:IC27)

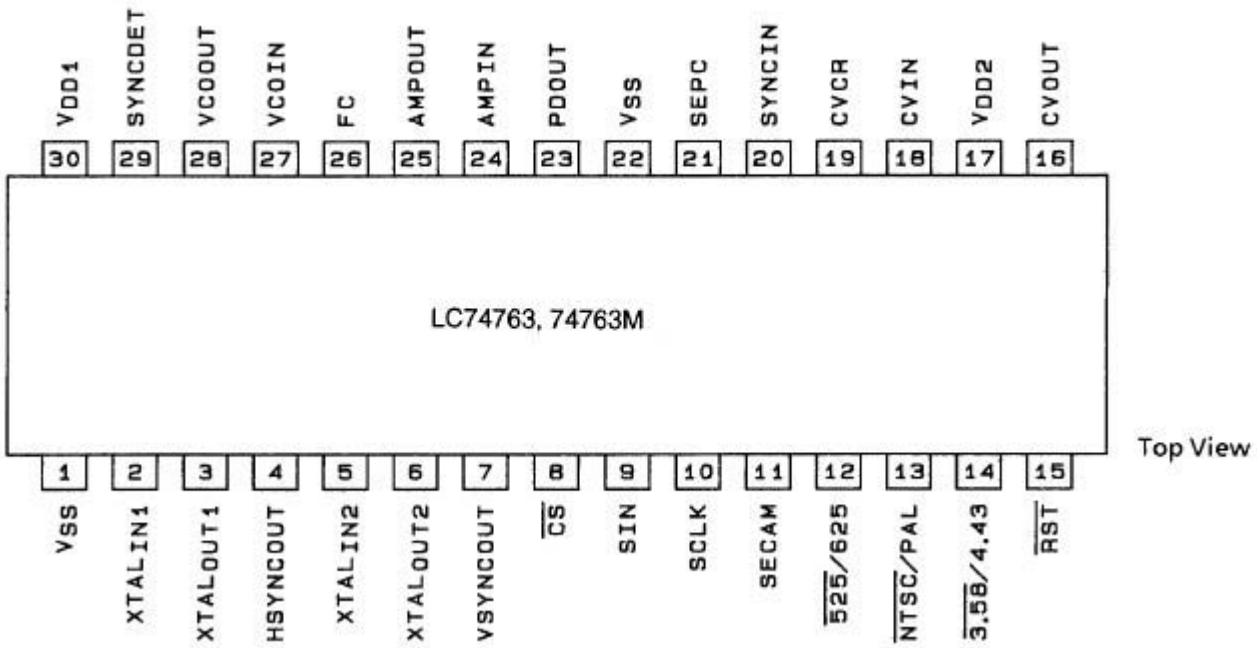

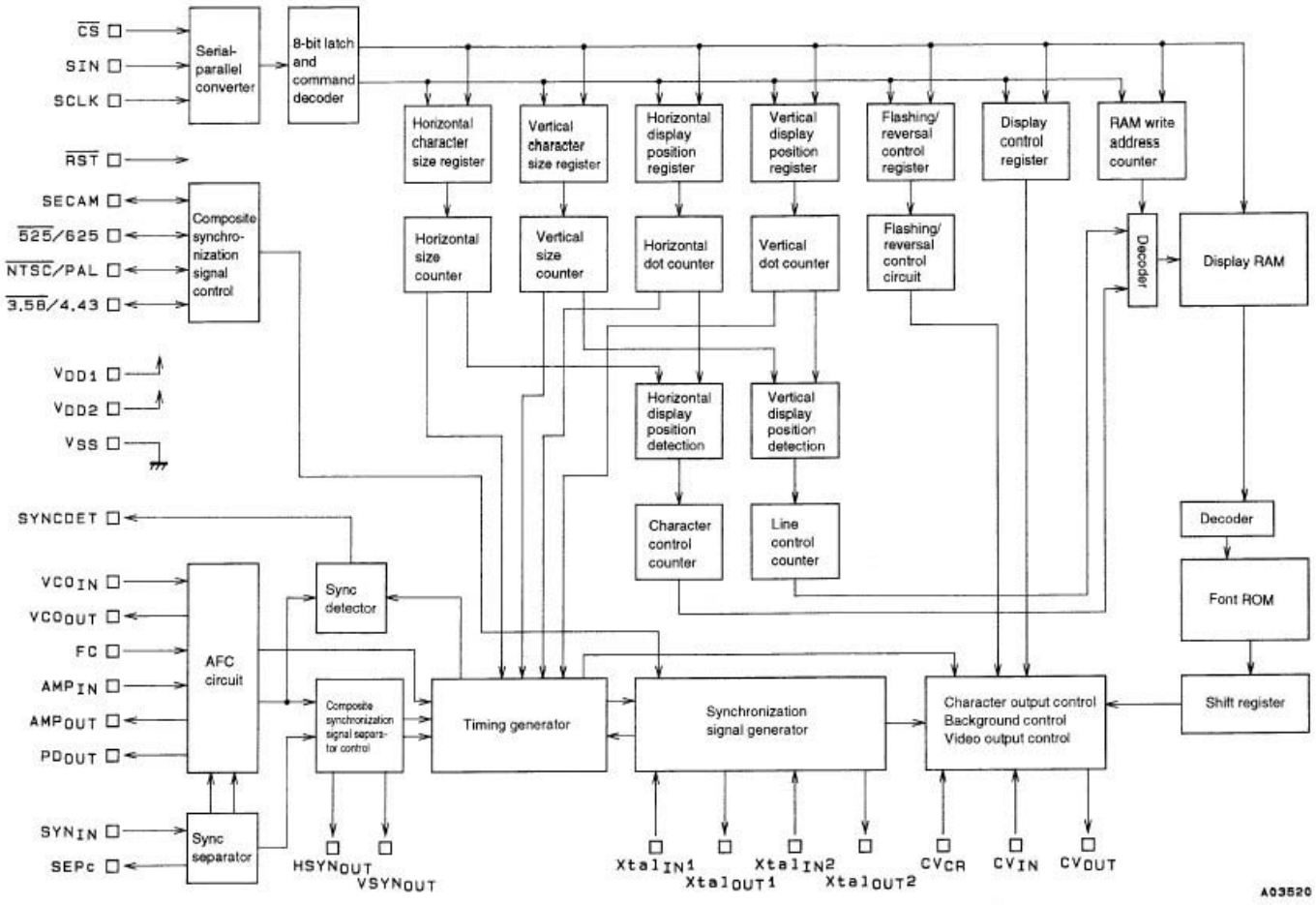

22. NJM2068M (DSP: IC13, 41, 42, 43, 44, 49, 60, 61, 62, 63, 64, 65, 66, 67, 68, 69, 71, 72)
(FRONT: IC50, MAIN: IC22)
(PROCESSOR: IC2, 3, 4, 5, 6, 7, 10, 11, 25, 13, 14, 18, 19, 21, 22, 23, 24, 26)
(RS232: IC61)

NJM4580M (PROCESSOR: IC1)

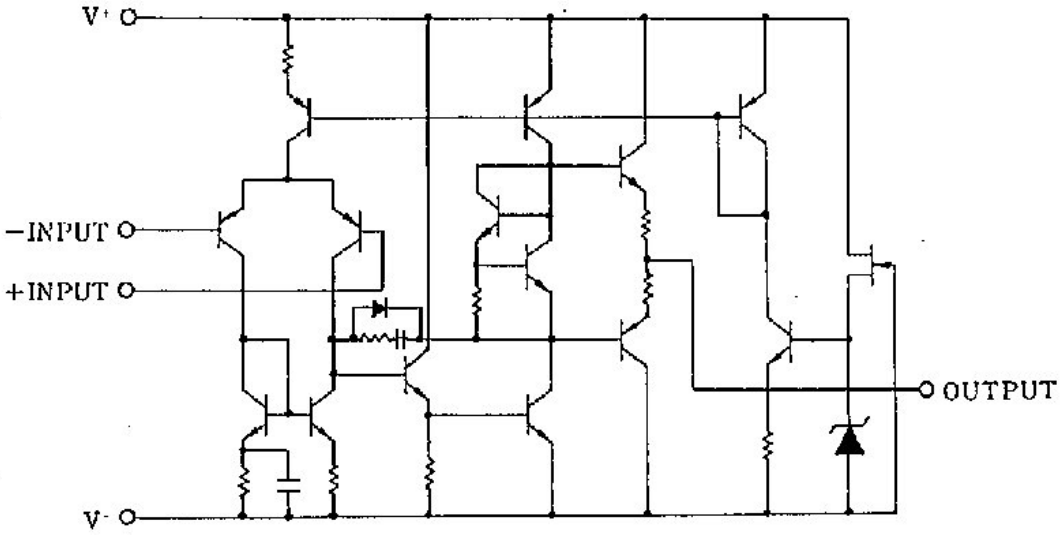

23. TC9482BFG (PROCESSOR:IC16, 17)

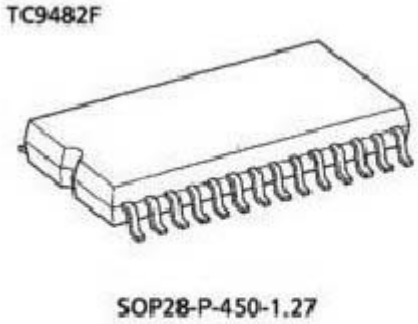

24. NJM317DL1 (DSP: IC94)

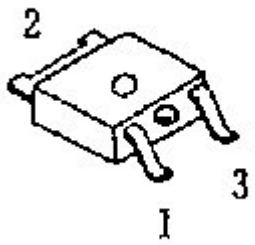

1. **Adjustment**
2. **Output**
3. **Input**

25. MAX3223CDWR (RS232: IC31)

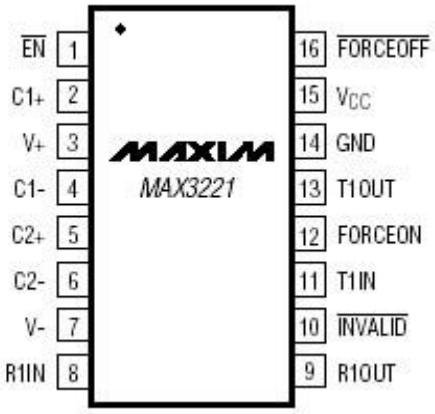

PIN			NAME	FUNCTION
MAX3221	MAX3223	MAX3243		
1	1	—	$\overline{EN}$	Receiver Enable Control. Drive low for normal operation. Drive high to force the receiver outputs into a high-Z state.
5	5	1	C2+	Positive terminal of inverting charge-pump capacitor
6	6	2	C2-	Negative terminal of inverting charge-pump capacitor
7	7	3	V-	-5.5V generated by the charge pump
8	9, 16	4–8	R_IN	RS-232 Receiver Inputs
13	8, 17	9, 10, 11	T_OUT	RS-232 Transmitter Outputs
11	12, 13	12, 13, 14	T_IN	TTL/CMOS Transmitter Inputs
9	10, 15	15–19	R_OUT	TTL/CMOS Receiver Outputs
—	—	20	R2OUTB	Noninverting Receiver Output—active in shutdown
10	11	21	$\overline{INVALID}$	Output of the valid signal detector. Indicates if a valid RS-232 level is present on receiver inputs logic "1".
16	20	22	$\overline{FORCEOFF}$	Drive low to shut down transmitters and on-board power supply. This overrides all automatic circuitry and FORCEON (Table 1).
12	14	23	FORCEON	Drive high to override automatic circuitry keeping transmitters on ($\overline{FORCEOFF}$ must be high) (Table 1).
4	4	24	C1-	Negative terminal of the voltage doubler charge-pump capacitor
14	18	25	GND	Ground
15	19	26	V_{CC}	+3.0V to +5.5V Supply Voltage
3	3	27	V+	+5.5V generated by the charge pump
2	2	28	C1+	Positive terminal of the voltage doubler charge-pump capacitor

26. MM1511XNRE (VIDEO: IC32)

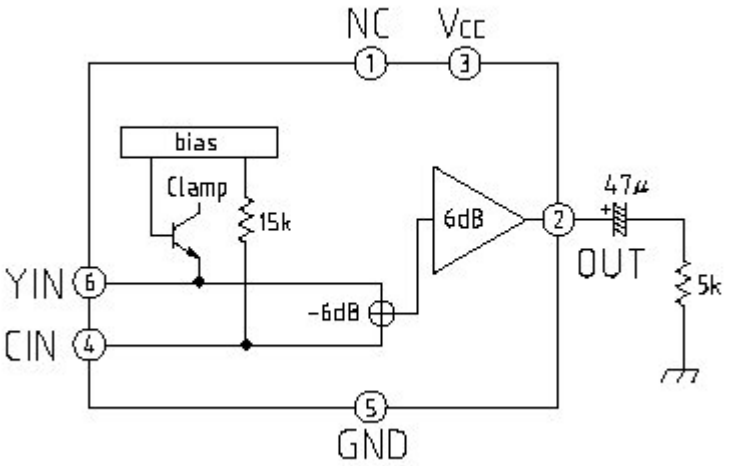

27. MM1503XNRE (VIDEO: IC17 IC25 IC26 IC33 IC34 IC35 IC36 IC37)

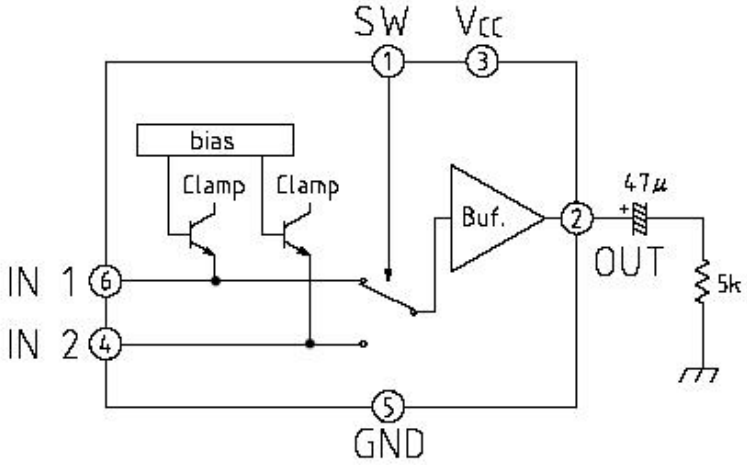

28. MM1505XNRE (RS232: IC405)

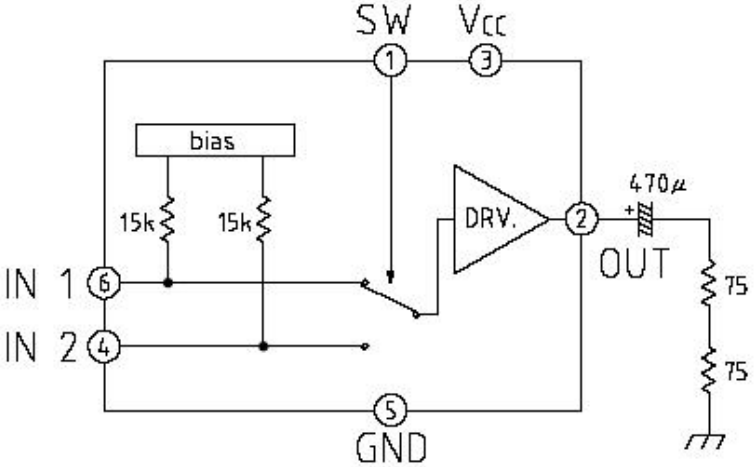

29. NJM2296M (VIDEO:IC13, 14, 15, 16)

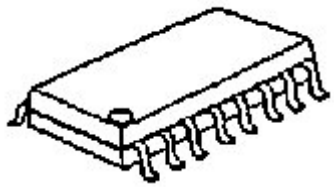

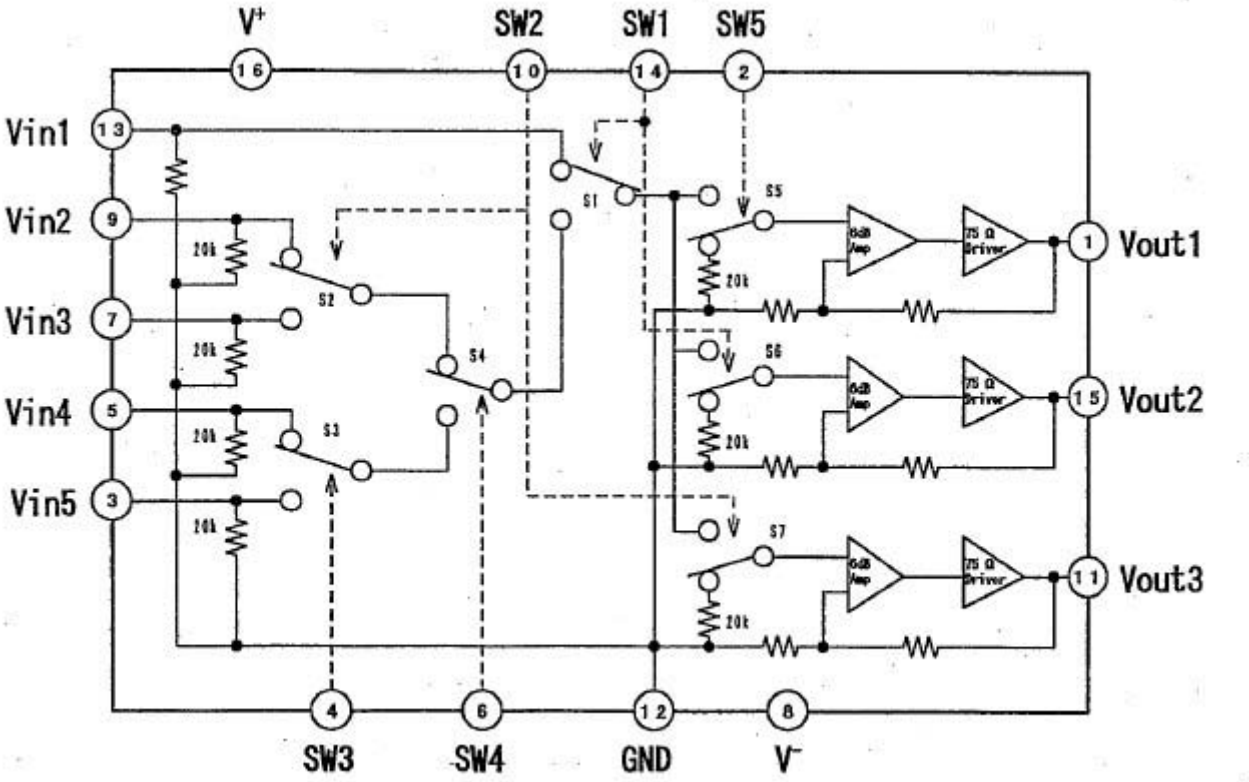

30. NJM2586M (VIDEO:IC38)

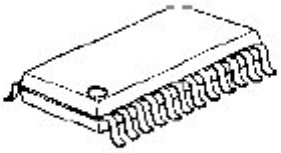

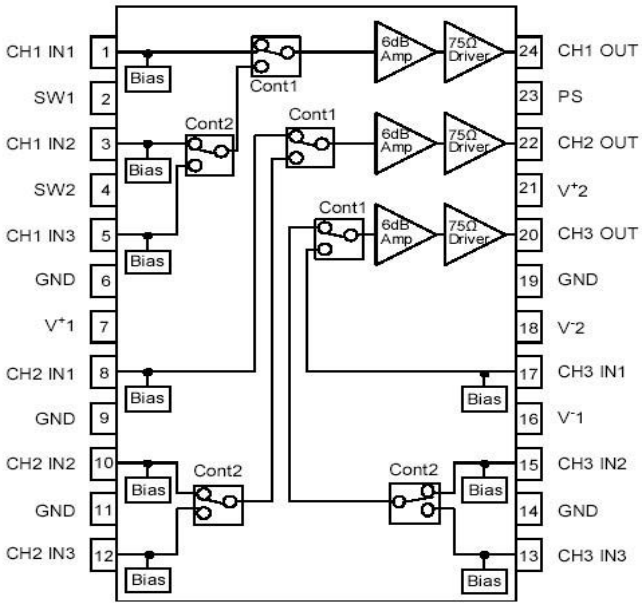

31. NJM4556AD (PROCESSOR:IC20)

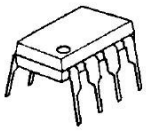

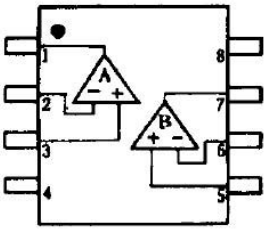

PIN FUNCTION
1.A OUTPUT
2.A –INPUT
3.A +INPUT
4.V^-
5.B +INPUT
6.B –INPUT
7.B OUTPUT
8.V^+

32. PC-17T1 (DSP: IC85 RS232: IC32, 33)

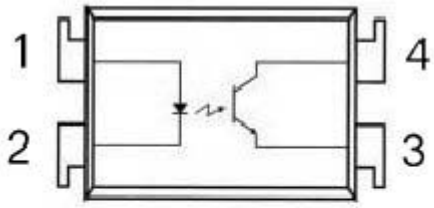

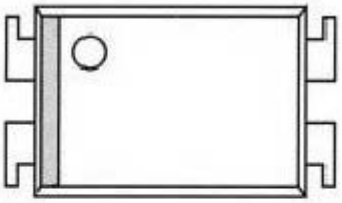

PIN Connections
1.Anode
2.Cathode
3.Emitter
4.Collector

33. TC9273CFG-004 (PROCESSOR: IC8, 9)

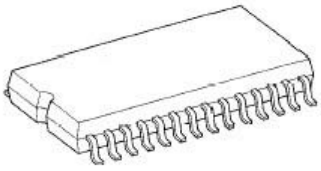

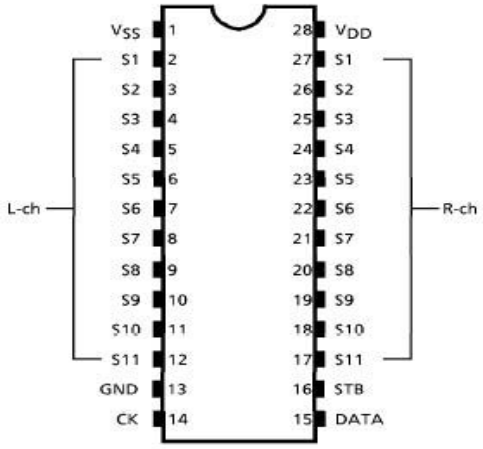

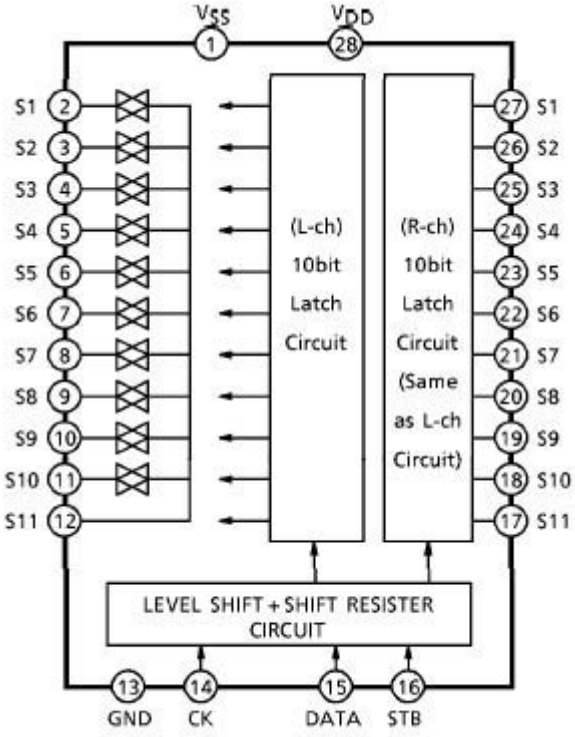

34. SH95ID (VIDEO: IC23, 28, 31)

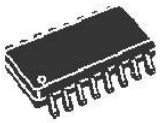

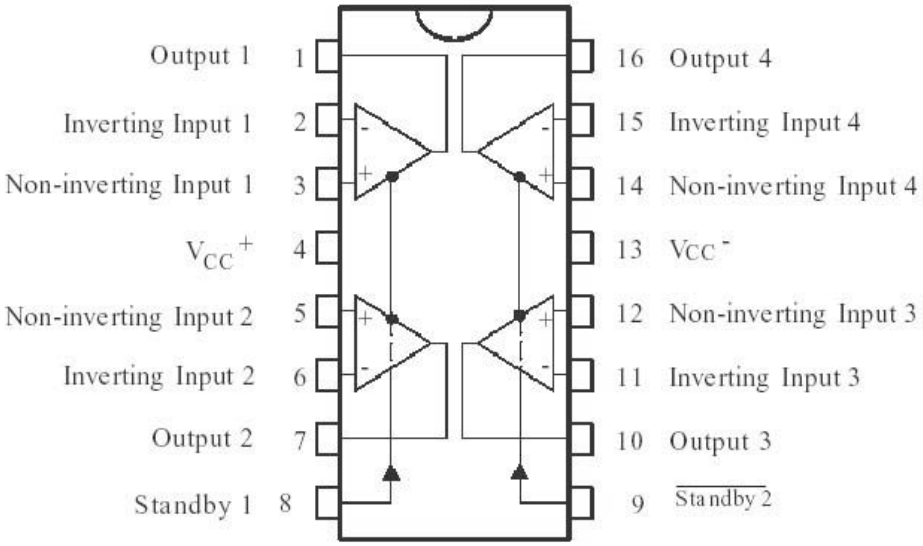

35. SN74LVC1G17DBVR SOT(SOT-23)DBV (DSP: IC57 IC59)

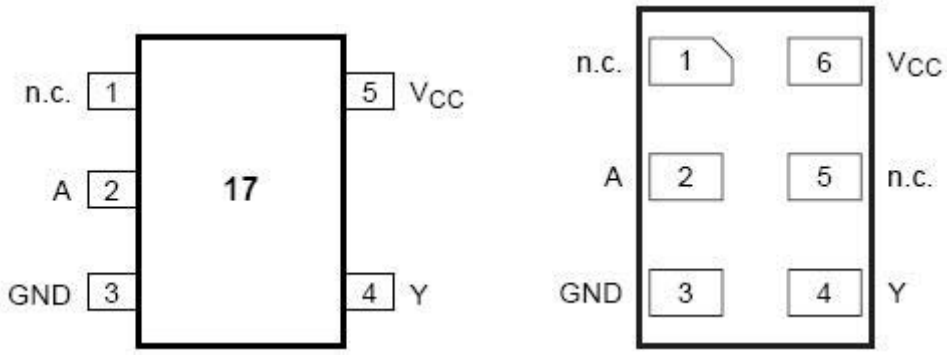

36. SN74LVC257AD (DSP: IC78 IC17 IC18 IC19) (VIDEO: IC49)

LOGIC DIAGRAM (POSITIVE LOGIC)

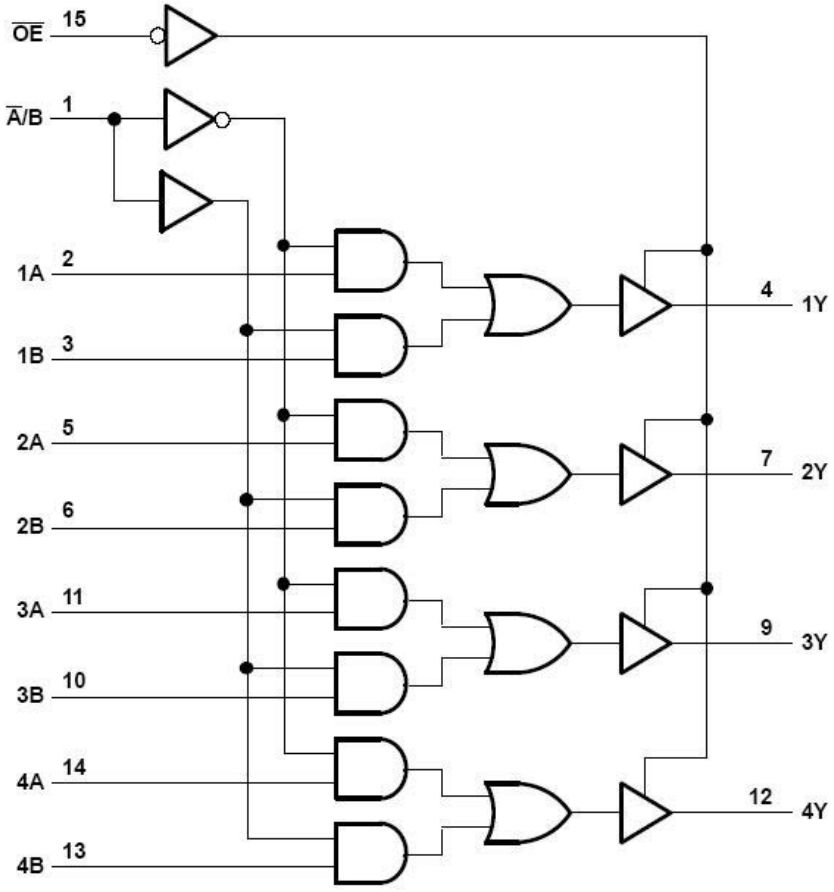

SN54LVC257A . . . J OR W PACKAGE
SN74LVC257A . . . D, DB, NS, OR PW PACKAGE
(TOP VIEW)

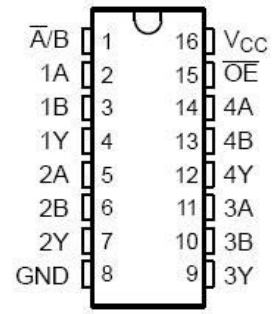

Pin numbers shown are for the D, DB, J, NS, PW, RGY, and W packages.

37. AD1852JRSZ SSOP28

FUNCTIONAL BLOCK DIAGRAM

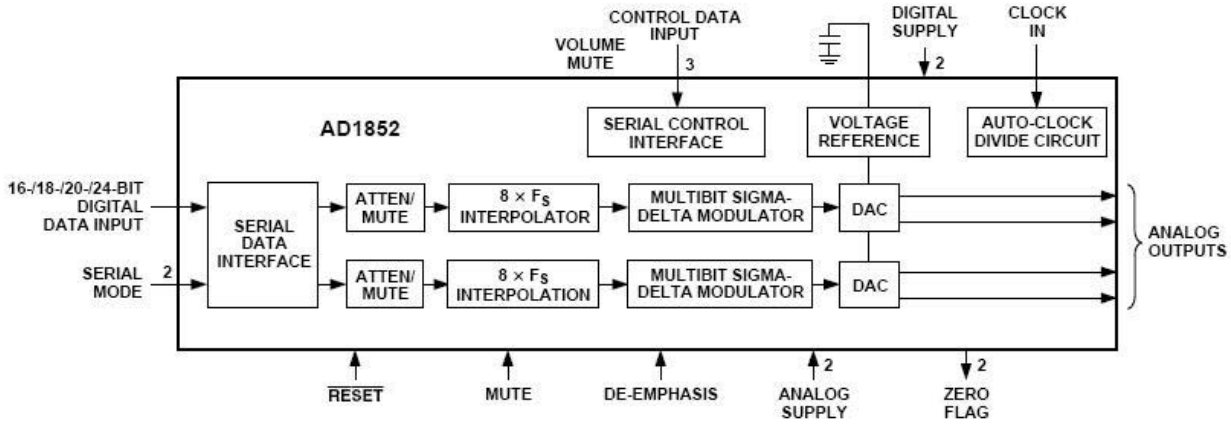

PIN CONFIGURATION

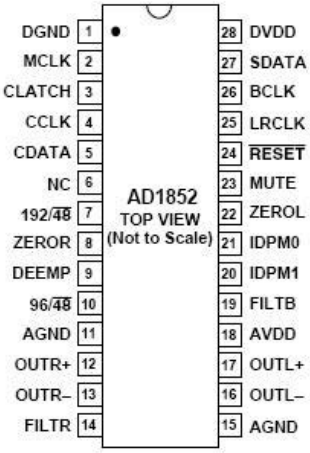

28-Lead Shrink Small Outline Package (SSOP) (RS-28)

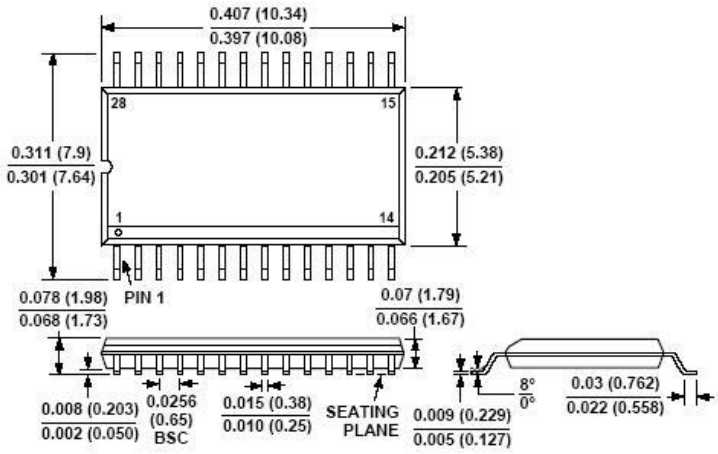

38. AK4114VQ LQFP48 (DSP: IC20)

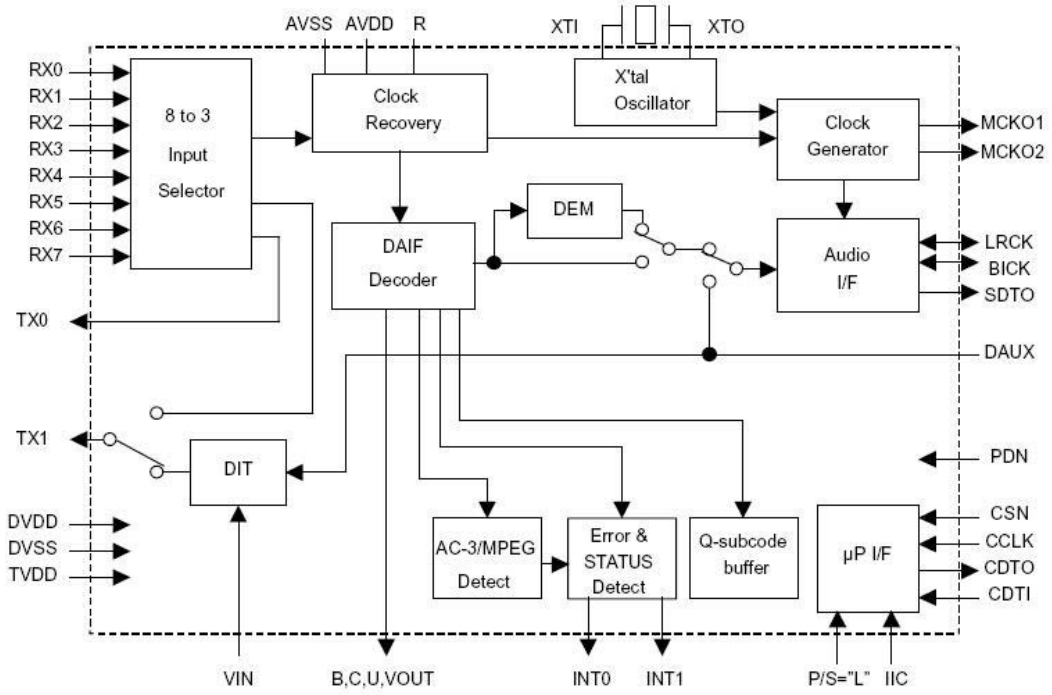

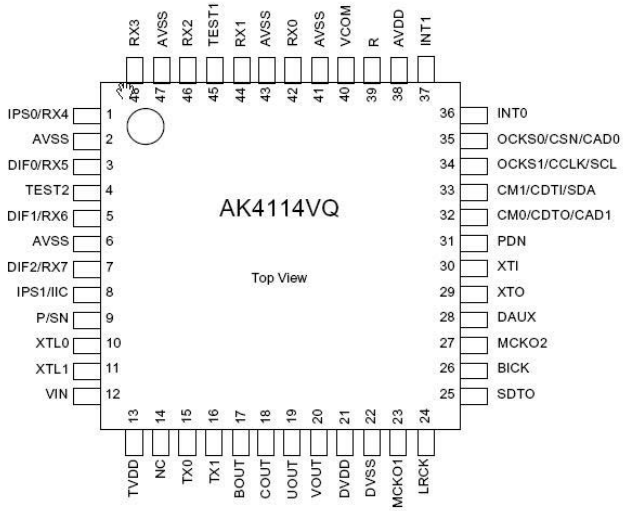

39. ACF451832-333-T (E901)

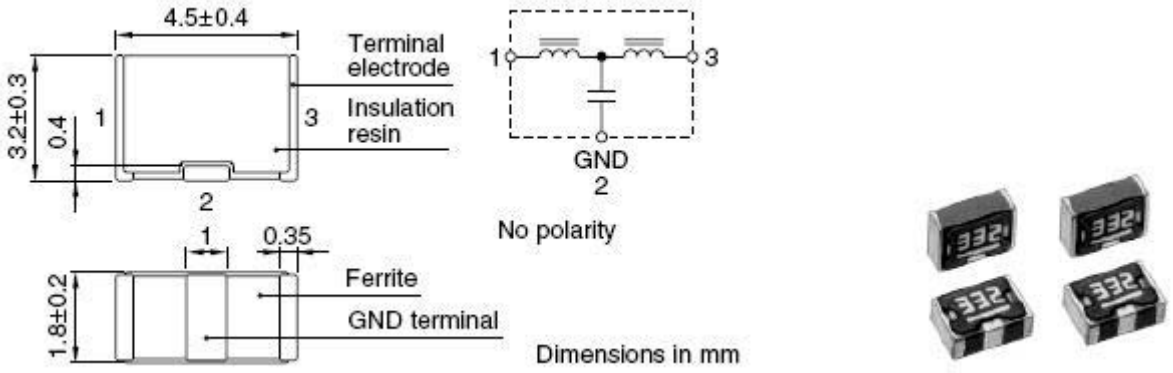

40. CS4391A-KZZ SOP20 (DSP: IC11 IC31)

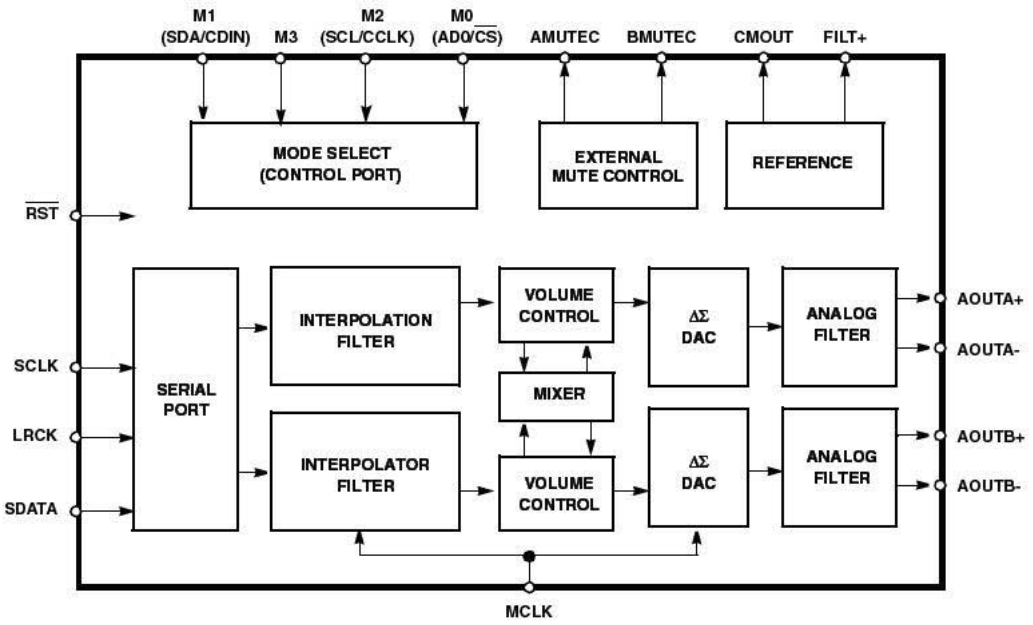

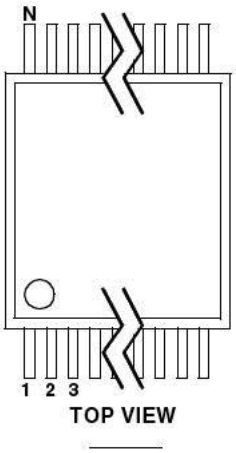

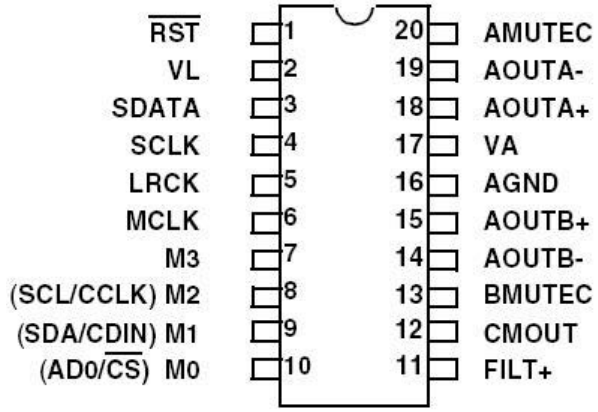

41. ADA4410-6ACPZ (VIDEO: IC40)

Pin No.	Name	Description
1	Pb1/B1_HD	Channel 1 Pb/B High Definition Input
2	GND	Signal Ground Reference
3	Pr1/R1_HD	Channel 1 Pr/R High Definition Input
4	F_SEL_A	Filter Cutoff Select Input A
5	F_SEL_B	Filter Cutoff Select Input B
6	Y2/G2_HD	Channel 2 Y/G High Definition Input
7	GND	Signal Ground Reference
8	Pb2/B2_HD	Channel 2 Pb/B High Definition Input
9	GND	Signal Ground Reference
10	Pr2/R2_HD	Channel 2 Pr/R High Definition Input
11	MUX_SD	Standard Definition Input MUX Select Line
12	Y1_SD	Channel 1 Y Standard Definition Input
13	Y2_SD	Channel 2 Y Standard Definition Input
14	C1_SD	Channel 1 C Standard Definition Input
15	C2_SD	Channel 2 C Standard Definition Input
16	VCC	Positive Power Supply
17	VEE	Negative Power Supply
18	CV_OUT	Composite Video Output
19	C_SD_OUT	C Standard Definition Output
20	Y_SD_OUT	Y Standard Definition Output
21	G_SEL	Gain Select
22	Pr/R_HD_OUT	Pr/R High Definition Output
23	Pb/B_HD_OUT	Pb/B High Definition Output
24	Y/G_HD_OUT	Y/G High Definition Output
25	VEE	Negative Power Supply
26	VCC	Positive Power Supply
27	DISABLE	Disable/Power Down/Logic Reference
28	LEVEL2	DC Level Adjust Pin 2
29	LEVEL1	DC Level Adjust Pin 1
30	MUX_HD	High Definition Input MUX Select Line
31	Y1/G1_HD	Channel 1 Y/G High Definition Input
32	GND	Signal Ground Reference

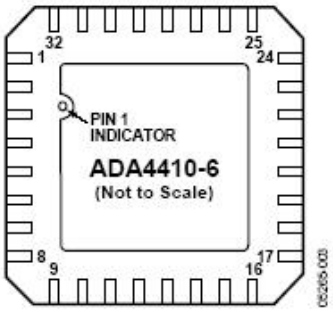

42. ADA4412-3ARQZ (VIDEO: IC39)

FUNCTIONAL BLOCK DIAGRAM

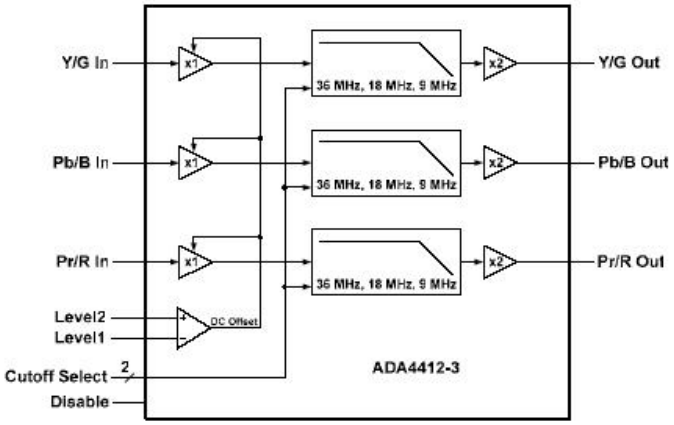

Figure 1.

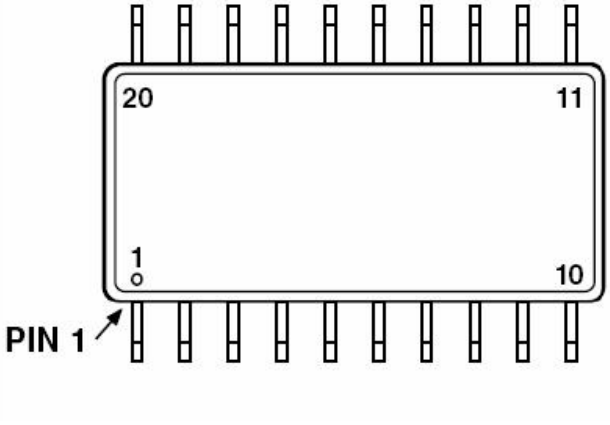

43. DV7320LKSTZ (VIDEO: IC29)

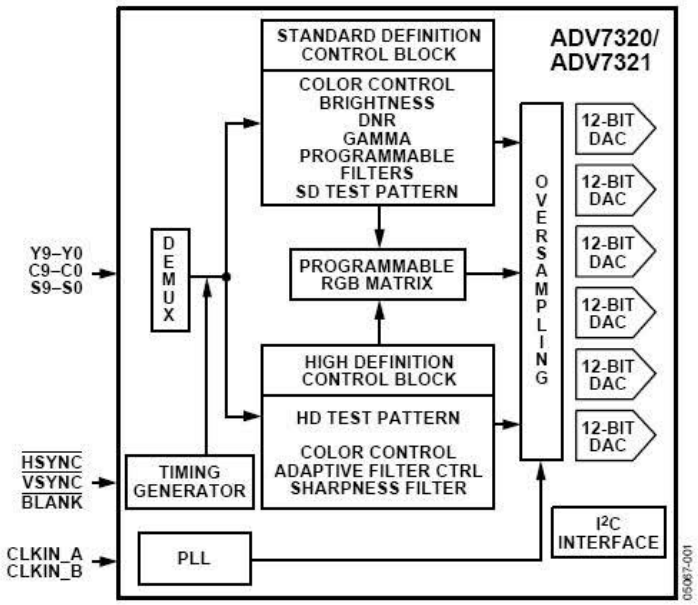

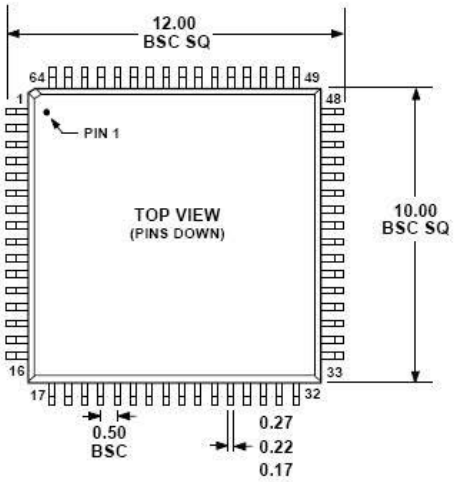

44. AD1580BRTZ (VIDEO: IC64)

3-Lead Small Outline Transistor Package [SOT-23-3]
(RT-3)
Dimensions shown in millimeters

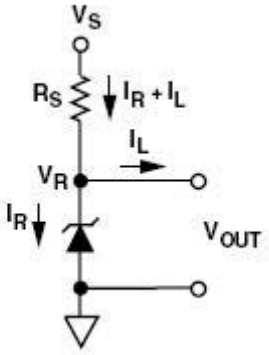

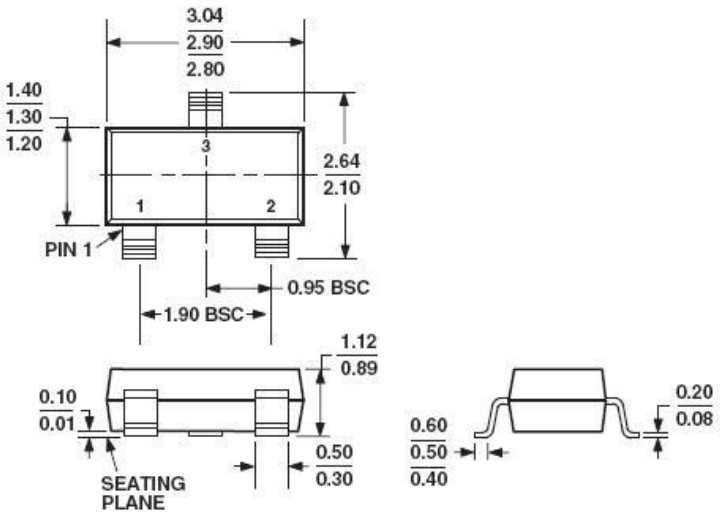

45. SDRAMK4S643232H (VIDEO: IC48)

FUNCTIONAL BLOCK DIAGRAM

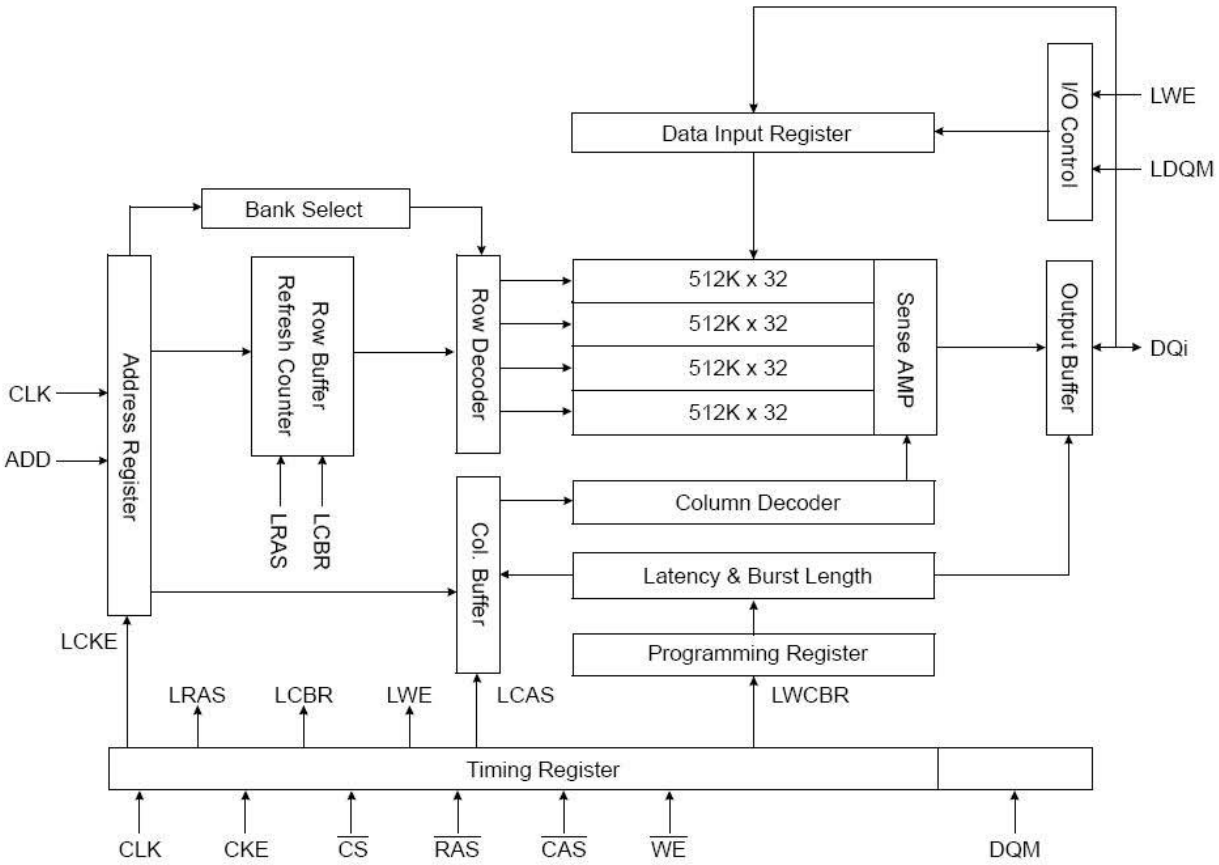

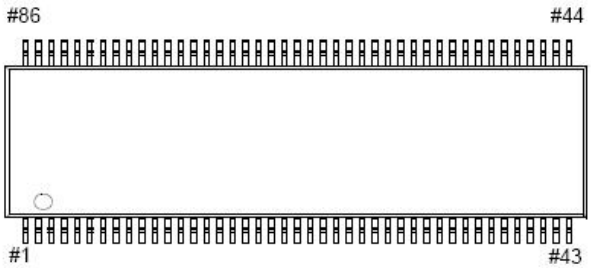

46. ADV7401BSTZ (VIDEO: IC24)

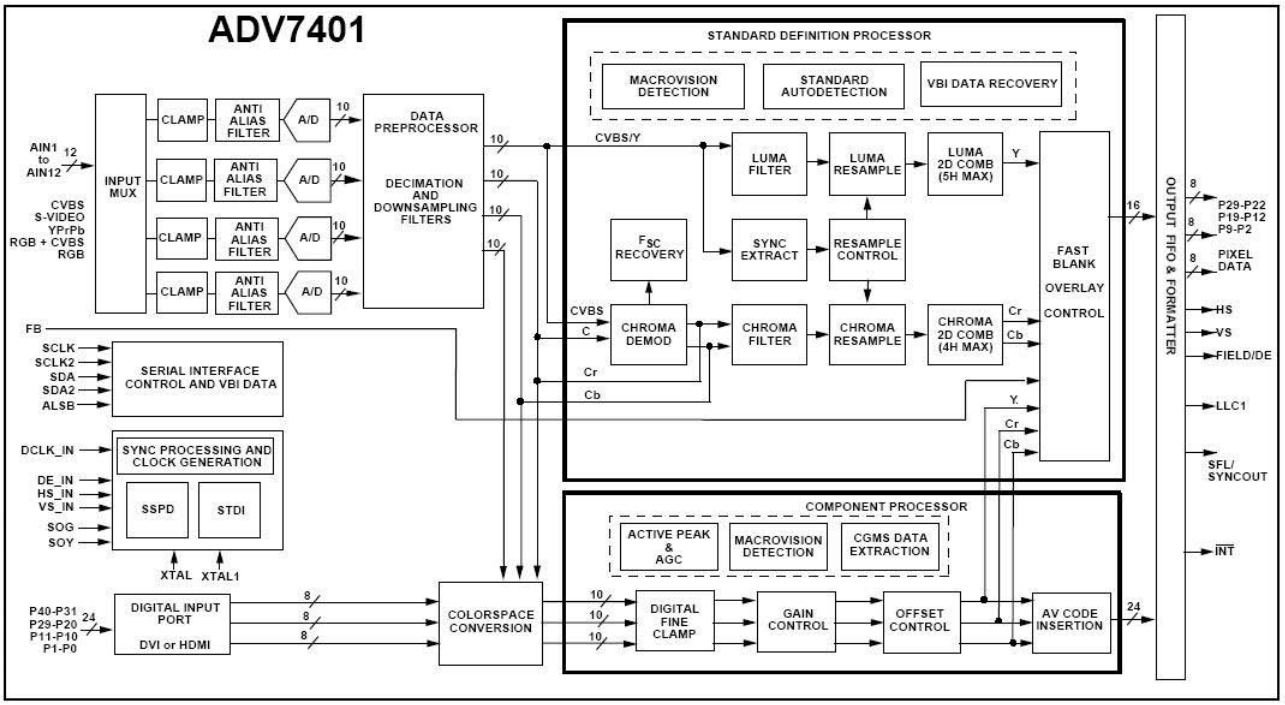

Functional Block Diagram

Figure 1: Functional Block Diagram

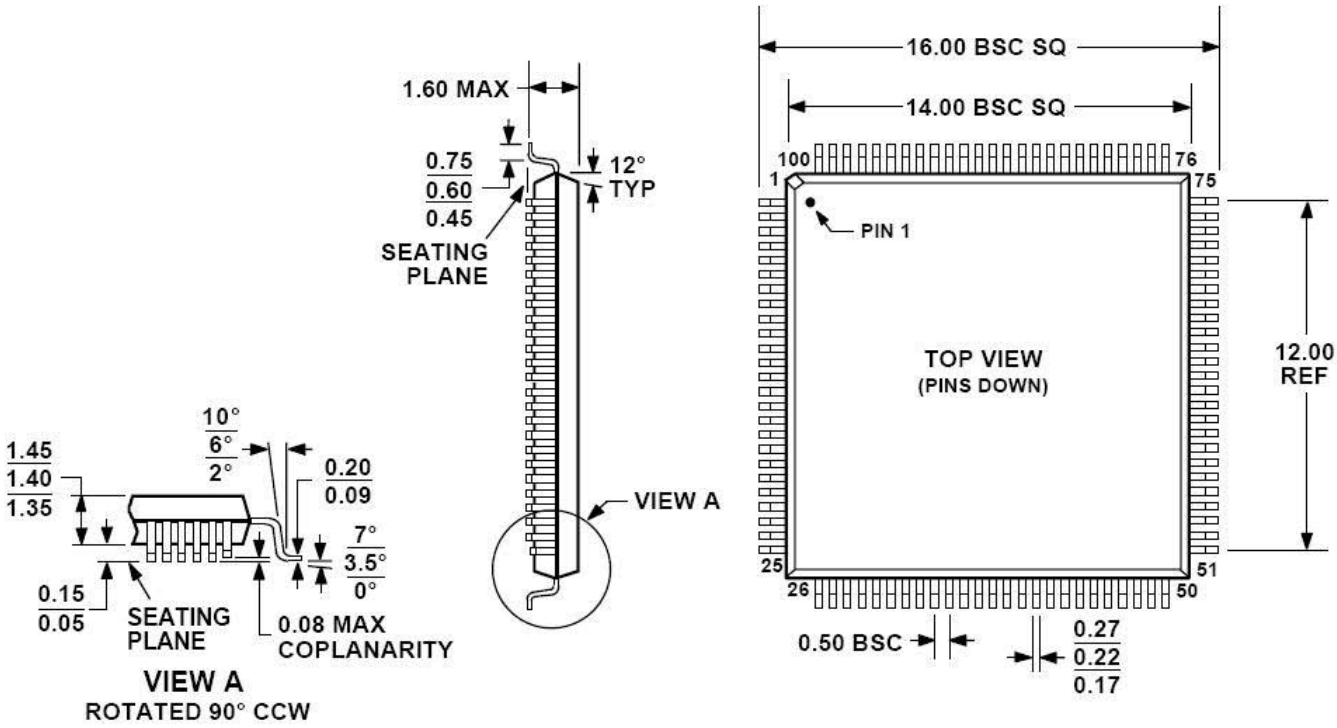

COMPLIANT TO JEDEC STANDARDS MS-026BED

47. RCLAMP0514M (VIDEO: IC56 IC57 IC61 IC62)

Circuit Diagram

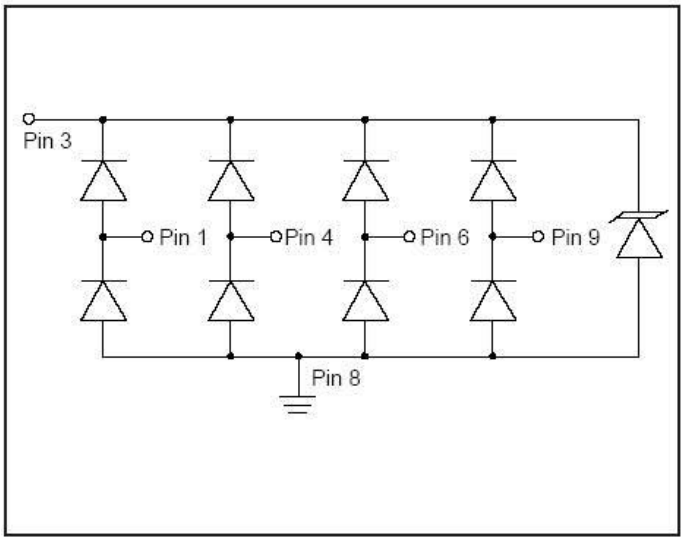

Schematic & PIN Configuration

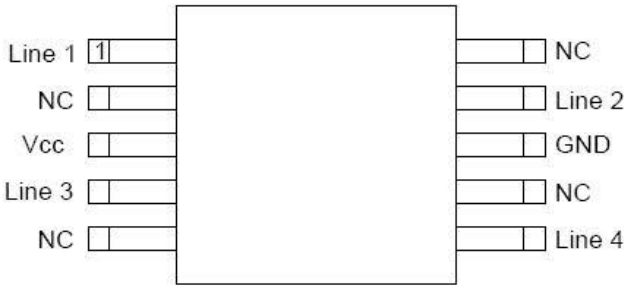

MSOP-10L (Top View)

48. 2N7002LT1G (Q119 Q120 Q121 Q122)

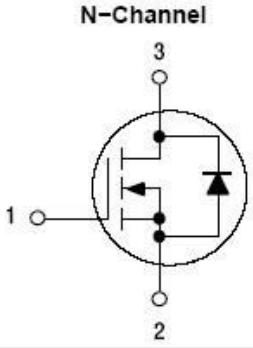

MARKING DIAGRAM & PIN ASSIGNMENT

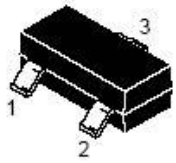

SOT−23
CASE 318
STYLE 21

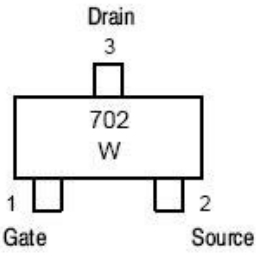

702	= Device Code
W	= Work Week

49. UPA672T (VIDEO: IC41 IC44 IC58)

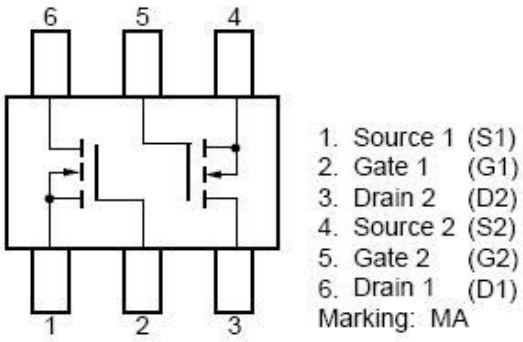

1. Source 1 (S1)
2. Gate 1 (G1)
3. Drain 2 (D2)
4. Source 2 (S2)
5. Gate 2 (G2)
6. Drain 1 (D1)

Marking: MA

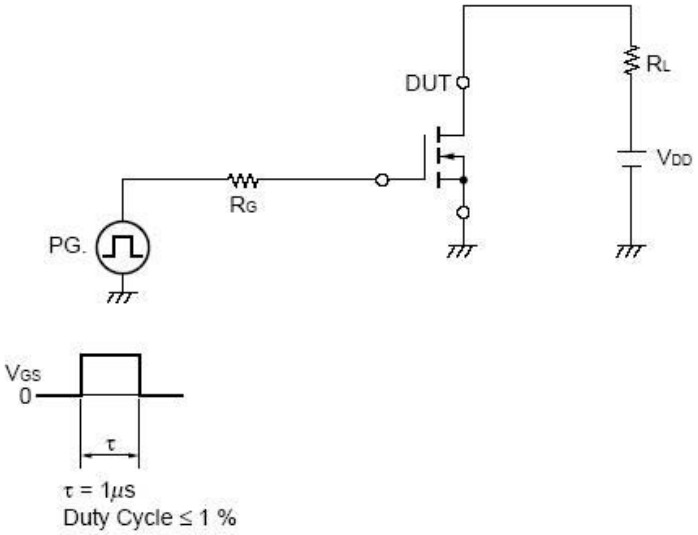

50. SN74CB3T3306DCTR (VIDEO: IC66)

(TOP VIEW)

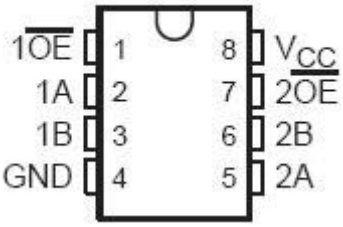

FUNCTION TABLE
(each bus switch)

INPUT $\overline{OE}$	INPUT/OUTPUT A	FUNCTION
L	B	A port = B port
H	Z	Disconnect

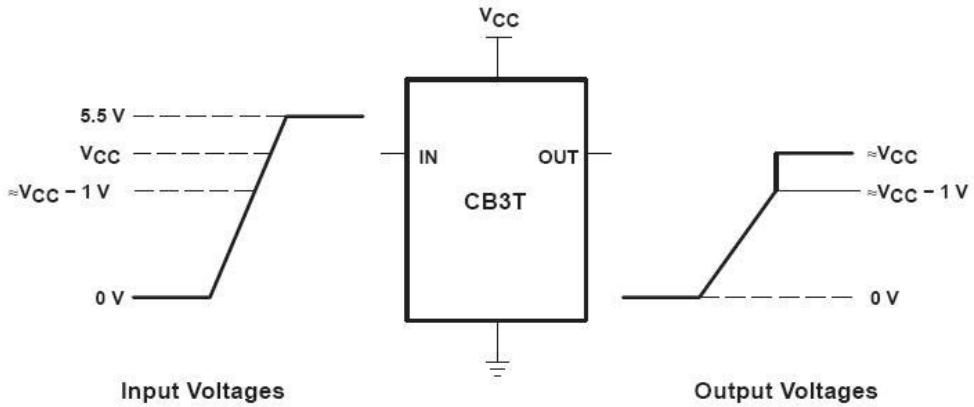

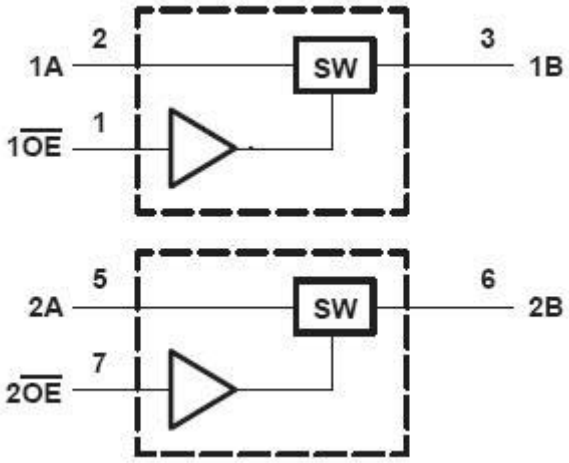

51. FLI2300-BD PQFP-208 (VIDEO: IC47)

Figure 2.1: FLI2300– Simplified Internal Block Diagram

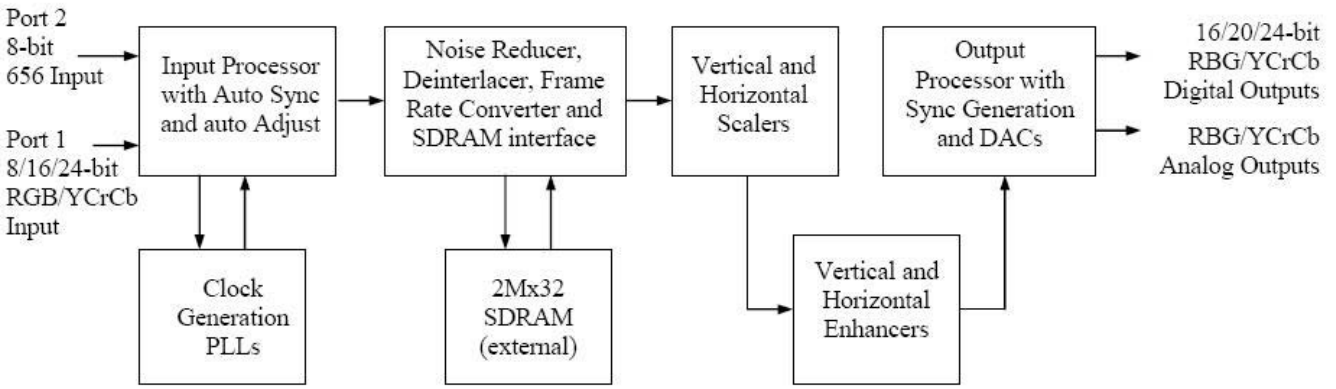

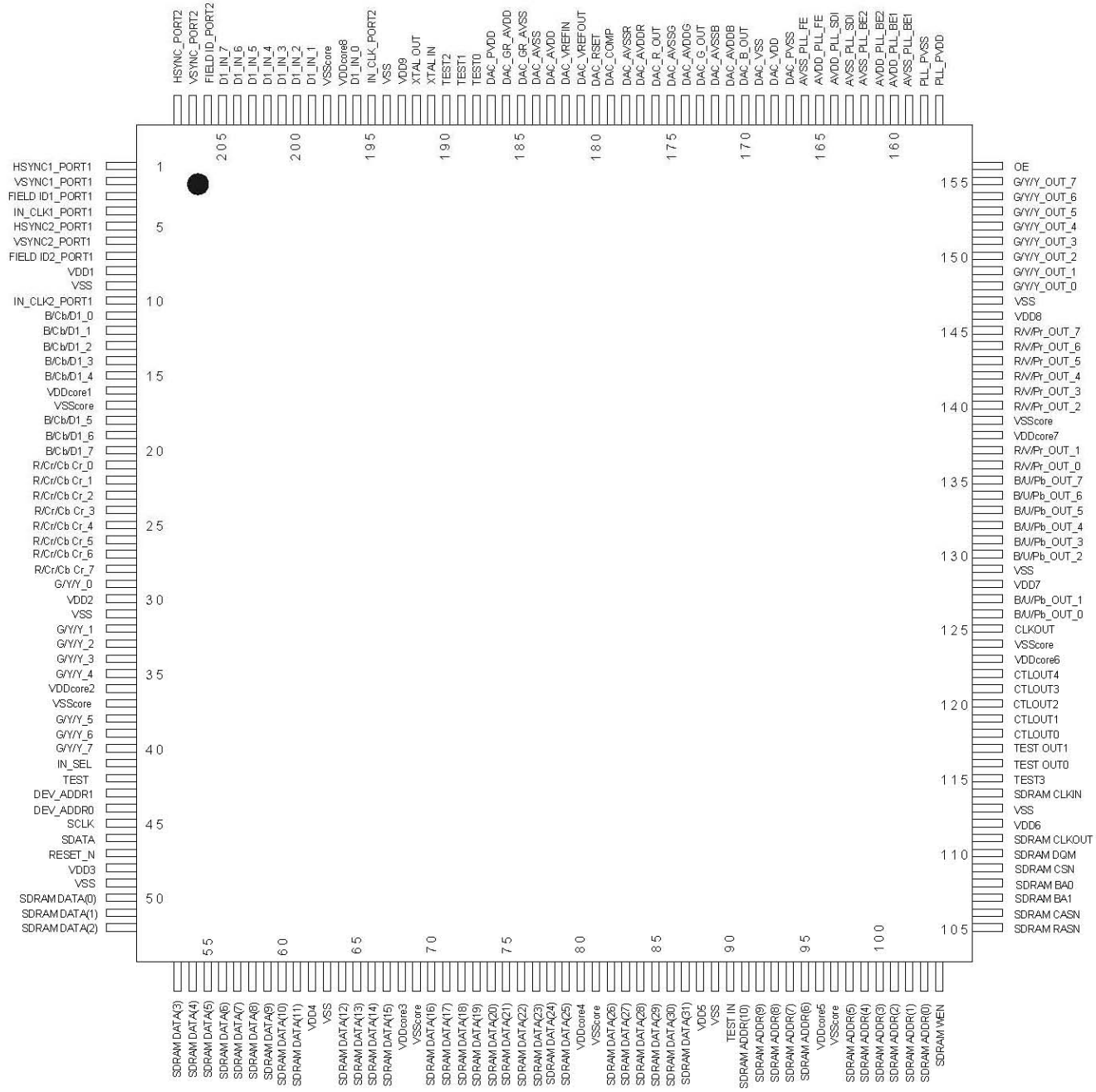

52. UPD70F3261YGC-8EA-A LQFP100 (DSP: IC22)

Internal block diagram

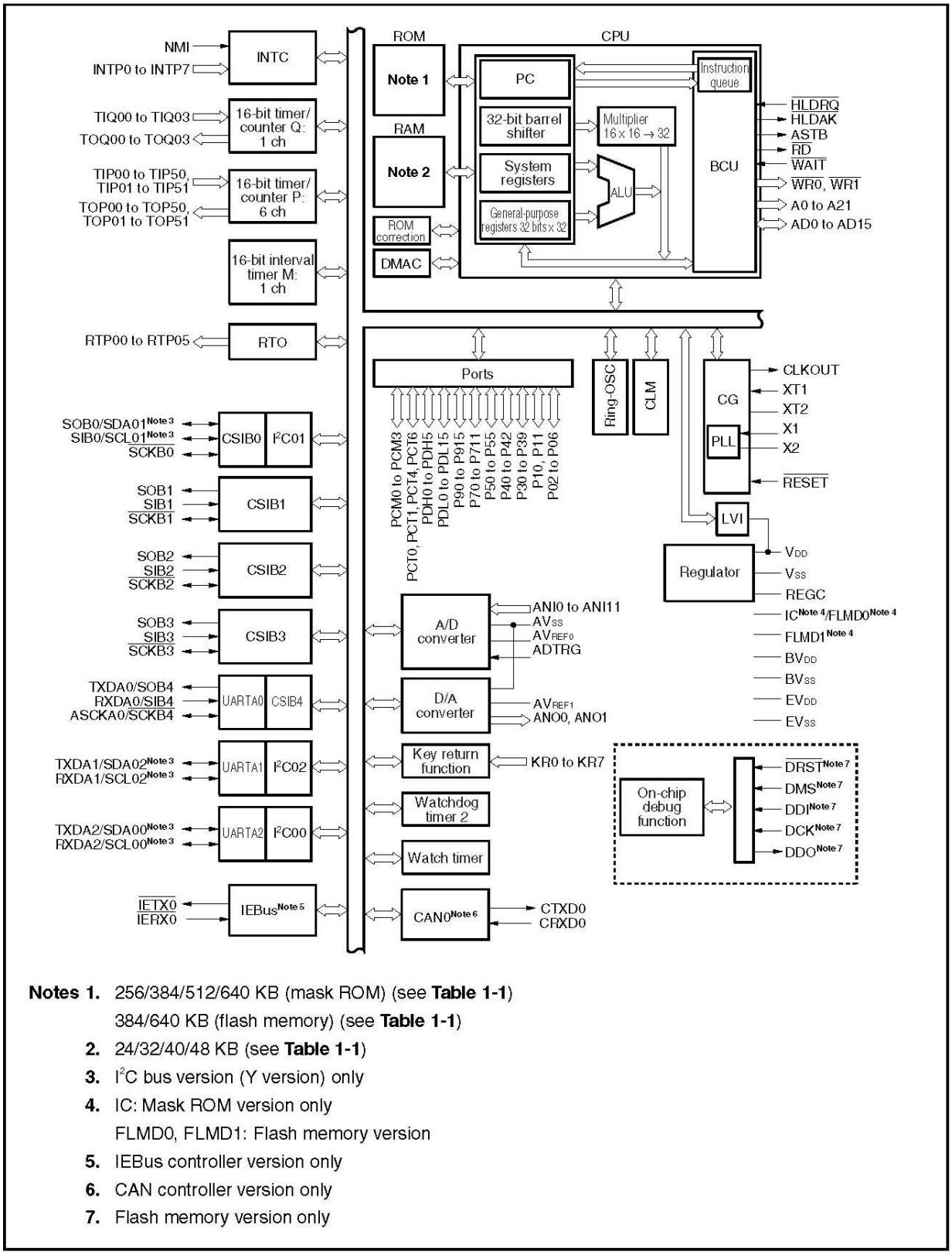

Notes 1. 256/384/512/640 KB (mask ROM) (see **Table 1-1**)
384/640 KB (flash memory) (see **Table 1-1**)

2. 24/32/40/48 KB (see **Table 1-1**)

3. I^2C bus version (Y version) only

4. IC: Mask ROM version only
FLMD0, FLMD1: Flash memory version

5. IEBus controller version only

6. CAN controller version only

7. Flash memory version only

UPD70F3261YGC-8EA-A LQFP100

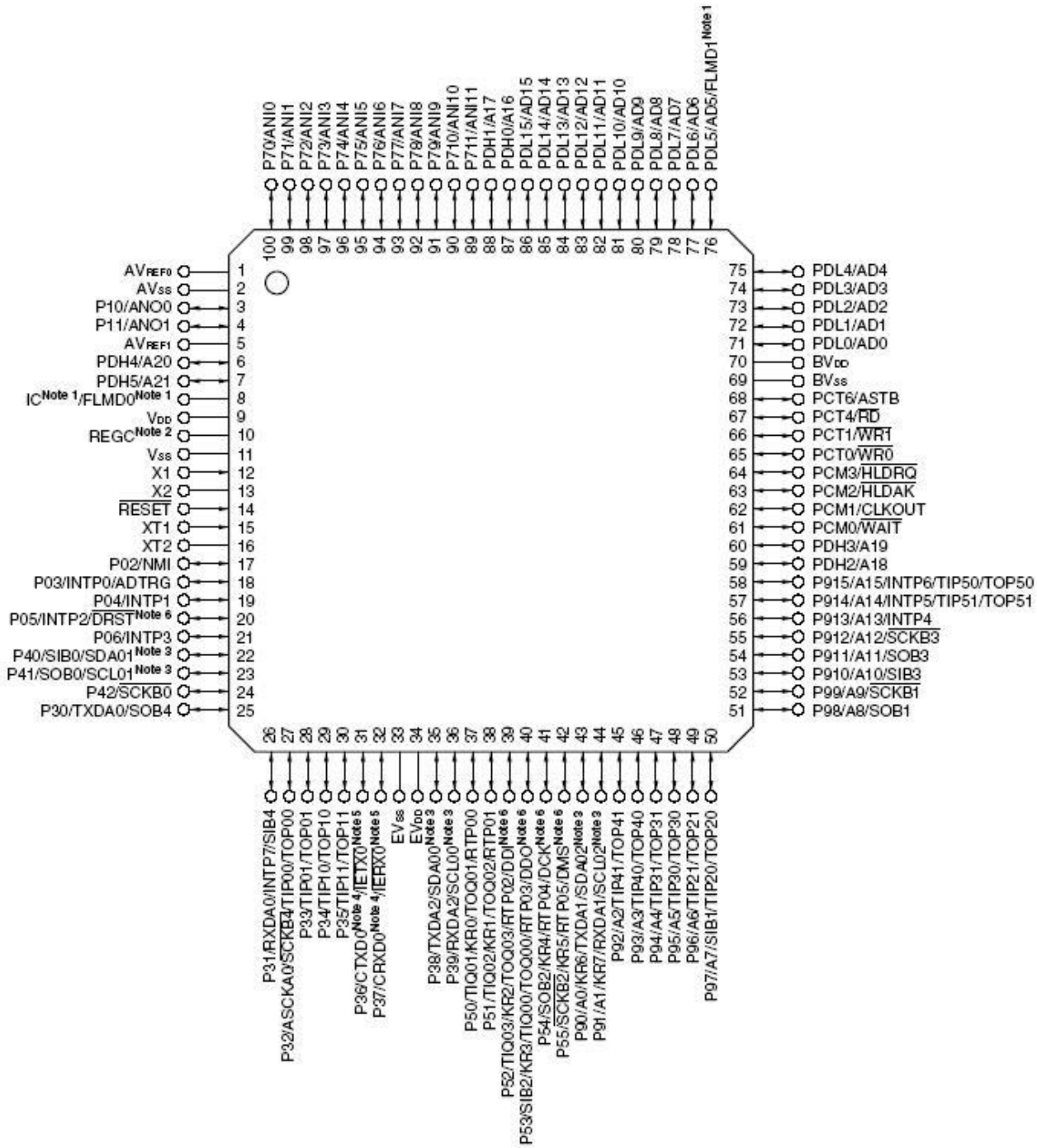

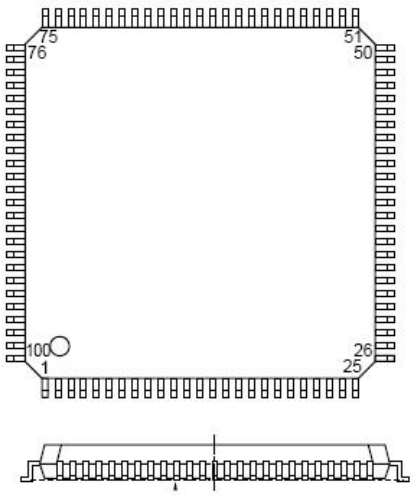

detail of lead end

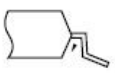

53. SII9030CTU TQFP80 (VIDEO: IC54)

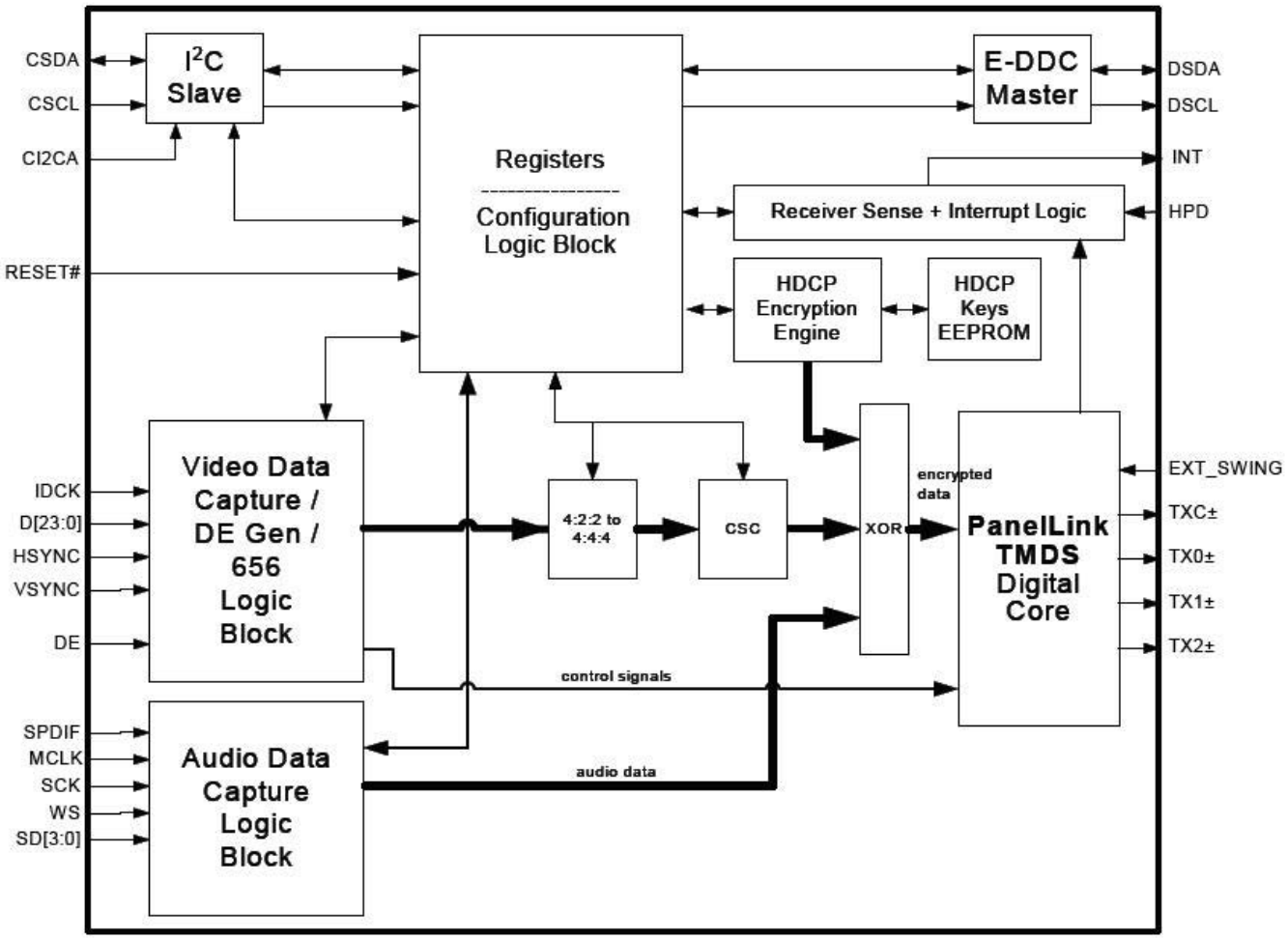

Figure 2. Functional Block Diagram

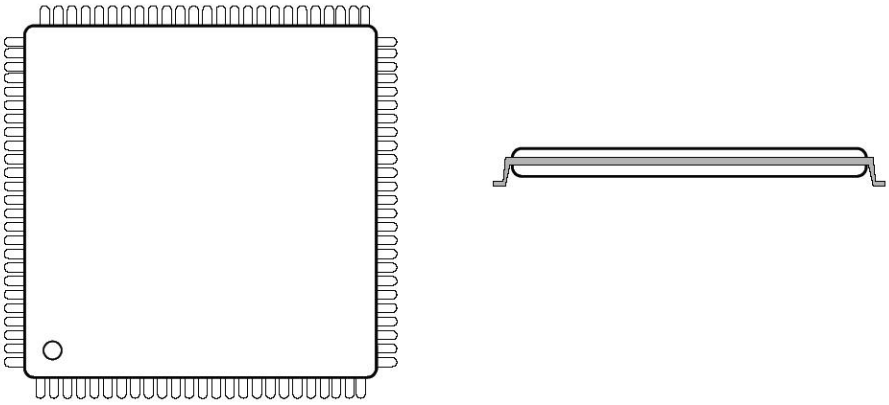

54. SIL9031CTU TQFP144 (VIDEO: IC55)

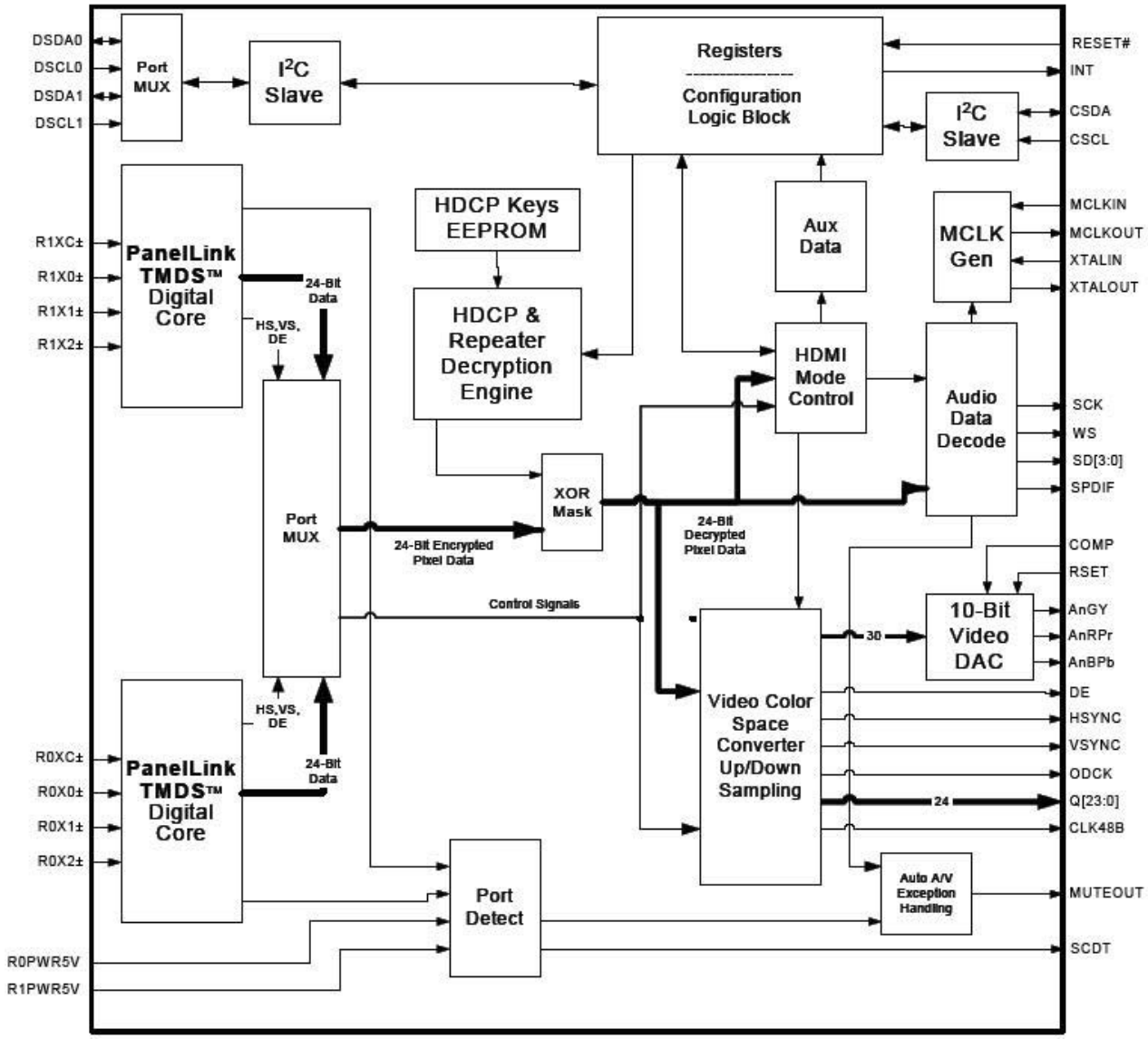

Figure 3. Functional Block Diagram

144-pin TQFP Package Dimensions

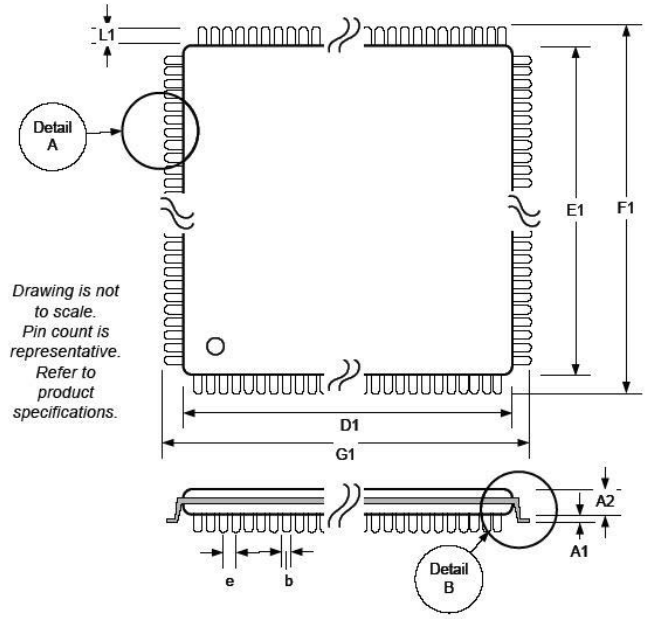

55. SN74CB3T3306DCTR SSOP-8 (DSP: IC96)

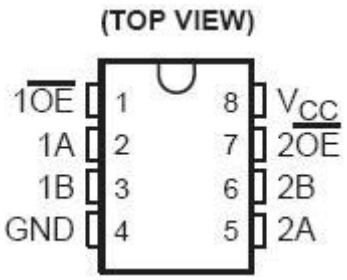

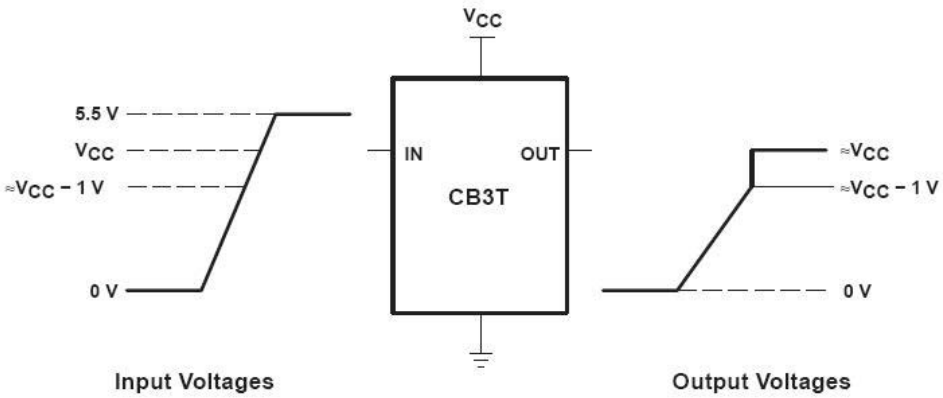

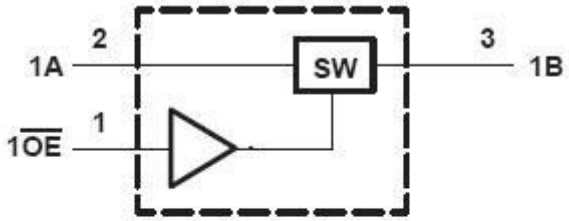

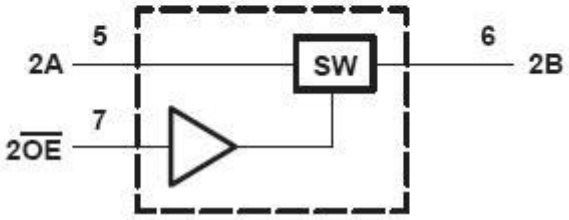

FUNCTION TABLE
(each bus switch)

INPUT $\overline{OE}$	INPUT/OUTPUT A	FUNCTION
L	B	A port = B port
H	Z	Disconnect

56. CJT117-3.3 (DSP: IC30 VIDEO: IC11)
CJT1117-2.5 (VIDEO: IC65)
IL1117S-1.8 (VIDEO: IC10)

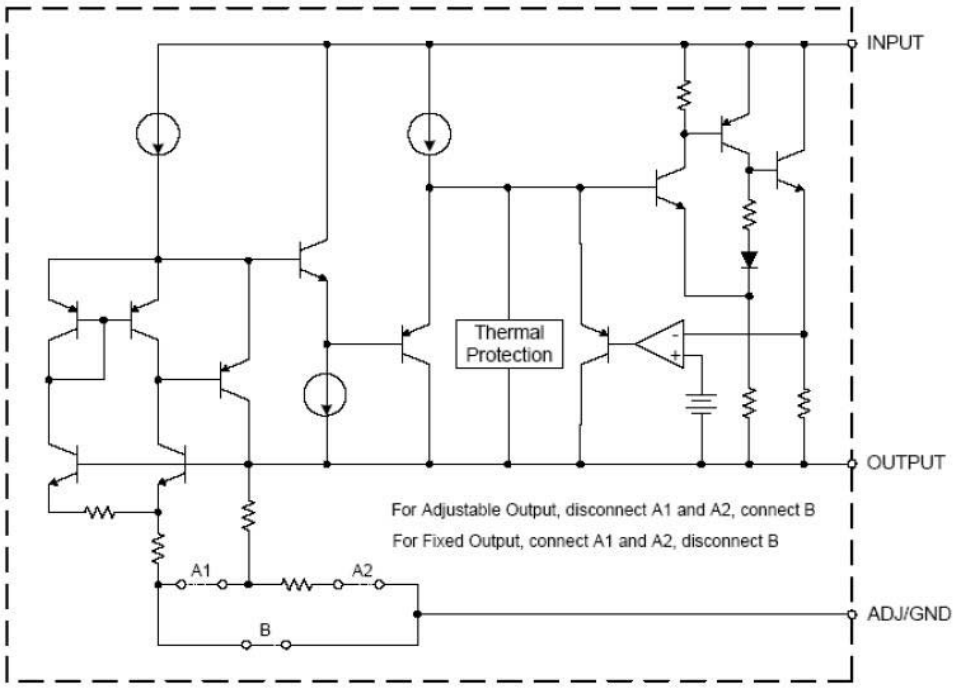

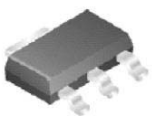

SOT-223

57. KIA278R33API (MAIN: IC71)
KIA278R06API (MAIN: IC73)
KIA378R05PI (SURROUND: IC64)

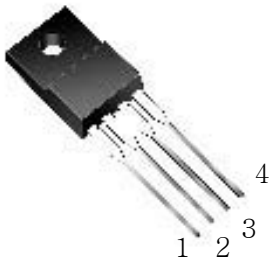

① DC INPUT (V_{IN})
② DC OUTPUT (V_O)
③ GND
④ ON/OFF CONTROL

58. KIA7805API (MAIN: IC72 SUPPLY: IC12)
KIA7812API (MAIN: IC59)
KIA7815API (MAIN: IC51, 60)
KIA7824API (MAIN: IC54)
KIA7806AP (VIDEO: IC30)
KIA78D33PI (SUPPLY: IC11 SURROUND: IC61)

1. INPUT
2. COMMON
3. OUTPUT

59. KIA7915API (MAIN: IC52)
KIA7905PI (SURROUNDY: IC63)

1. COMMON
2. INPUT
3. OUTPUT

•TRANSISTORS

1. KRA107S

(DSP: Q851)
(FRONT: Q824, 831, 832)
(PROCESSOR: Q109, 203, 301, 605, 608, 611, 614, 615, 618, 620, 623, 626 629, 754, 692, 751)
(RS232: Q301, 302)
(VIDEO: Q110, 111, 112, 123)

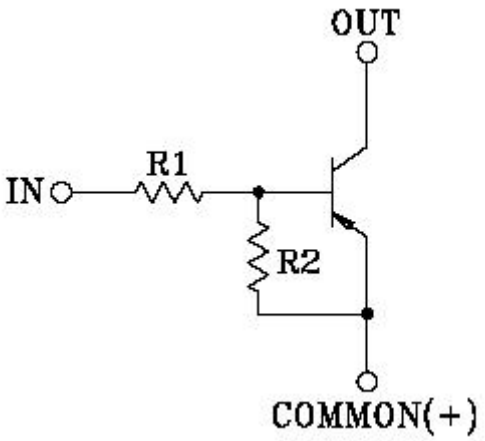

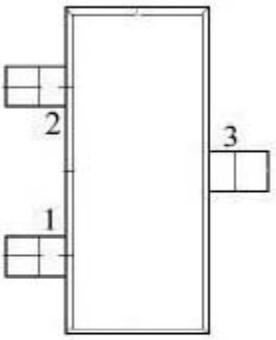

1. COMMON (EMITTER)
2. IN (BASE)
3. OUT (COLLECTOR)

2. KRC107S

(DSP: Q401, 407, 408, 411, 502, 503, 505, 506, 509, 512, 700, 710, 188, 200, 405, 409, 500, 501, 504, 507, 508, 510, 513, 514)
(FRONT: Q800, 801, 802, 803, 820, 822, 833)
(RS232: Q303, 304, 307, 310, 311)
(VIDEO: Q103, 104, 105, 106, 113, 114, 115, 118)

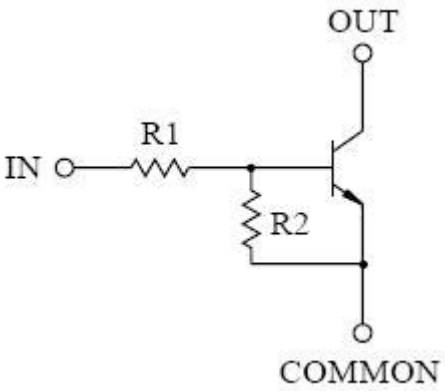

3. KTA1504Y (RS232: Q305 Q306)
(FRONT: Q703)
(PROCESSOR: Q601, 602, 621, 622, 624, 625, 627, 628, 630, 631, 104, 105, 107, 108 201, 202, 204, 205, 221, 222, 302, 303, 603, 604, 606, 607, 609, 610, 612, 613, 616 617, 690, 691, 752, 753)

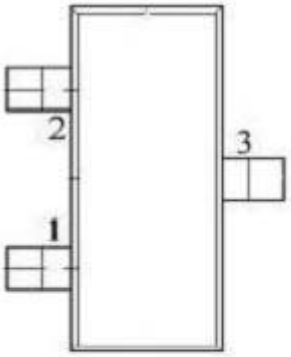

1. COMMON (EMITTER)
2. IN (BASE)
3. OUT (COLLECTOR)

4. KTC3875S (FRONT: Q701 Q702)
(VIDEO: Q101)

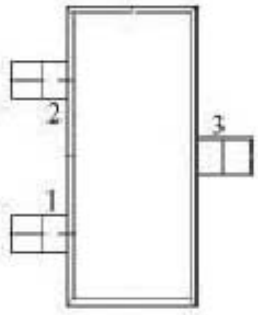

1. COMMON (EMITTER)
2. IN (BASE)
3. OUT (COLLECTOR)

5. KTC3199-GR (RS232: Q401 VIDEO: Q100 Q102)
KTA1267-GR (RS232: Q405 VIDEO: Q107 Q108 Q109 Q124)

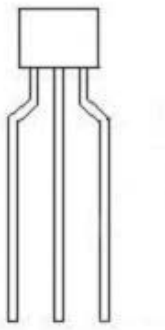

(1) Emitter
(2) Collector
(3) Base

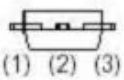

6. KTA1360 (MAIN: Q327 Q328 Q431 Q432 SURROUND: Q215 Q315 Q515)
-AVR745,645 ONLY
KTA1360 (MAIN: Q417 Q418 Q315 Q316 SURROUND: Q208 Q508 Q308)
-AVR445 ONLY
KTC3114 (MAIN: Q701 Q702 Q703 Q704 SURROUND: Q214 Q314 Q514)
KTC3423 (MAIN: Q323 Q324 Q429 Q430 SURROUND: Q213 Q313 Q513)
-AVR745,645 ONLY
KTC3423 (MAIN: Q419 Q420 Q317 Q318 SURROUND: Q209 Q509 Q309)
-AVR445 ONLY

1. EMITTER
2. COLLECTOR
3. BASE

7. 2SA1859A (MAIN: Q329 Q330 Q433 Q434 SURROUND: Q216 Q316 Q516)
2SC4883A (MAIN: Q331 Q332 Q435 Q436 SURROUND: Q217 Q317 Q517)

1.BASE
2.COLLECTOR
3.EMITTOR

8. KTA1268BL (MAIN: Q311 Q312 Q410 Q413 Q414 SURROUND: Q101 Q206 Q306 Q506)
KTC3198BL (MAIN: Q307 Q308 Q407 Q408 Q426 Q441 SURROUND: Q204 Q304 Q504)
KTC3200BL (MAIN: Q301 Q302 Q303 Q304 Q305 Q306 Q313 Q314 Q337 Q338 Q401 Q402 Q403 Q404 Q405 Q406 Q409 Q415 Q416 Q425)
(SURROUND: Q201 Q202 Q203 Q207 Q220 Q301 Q302 Q303 Q307 Q320 Q501 Q502 Q503 Q507 Q520)
KTD1302 (MAIN: Q601)
MPSA06 (DSP: Q511 FRONT: Q821 SUPPLY: Q102, Q102)
MPSA56 (FRONT: Q823)

1. EMITTER
2. COLLECTOR
3. BASE

9. KTA1024Y (MAIN: Q315 Q316 Q319 Q320 Q417 Q418 Q421 Q422 Q442
SURROUND: Q208 Q211 Q308 Q311 Q508 Q511)-AVR745,645 ONLY
KTC3206Y (MAIN: Q317 Q318 Q321 Q322 Q419 Q420 Q423 Q424
SURROUND: Q209 Q212 Q309 Q312 Q509 Q512)-AVR745,645 ONLY

1. EMITTER
2. COLLECTOR
3. BASE

10. KRA107M (DSP: Q851 RS232: Q301, 302)
KRC107M (MAIN:C443)

1. EMITTER
2. COLLECTOR
3. BASE

11. 2SA1145Y (MAIN: Q309 Q310 Q411 Q412 SURROUND: Q205 Q305 Q505)

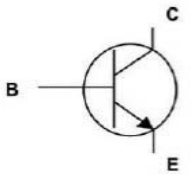

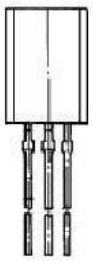

1. EMITTER
2. COLLECTOR
3. BASE

12. 2SA1986-R (MAIN: Q335 Q336 Q439 Q440
SURROUND: Q219 Q319 Q519)-AVR745,645 ONLY
2SC5358-R (MAIN: Q333 Q334 Q437 Q438
SURROUND: Q218 Q318 Q518)-AVR745,645 ONLY
2SD2560 (MAIN: Q333 Q334 Q437 Q438
SURROUND: Q218 Q318 Q518)-AVR445 ONLY
2SB1647 (MAIN: Q335 Q336 Q439 Q440
SURROUND: Q219 Q319 Q519)-AVR445 ONLY

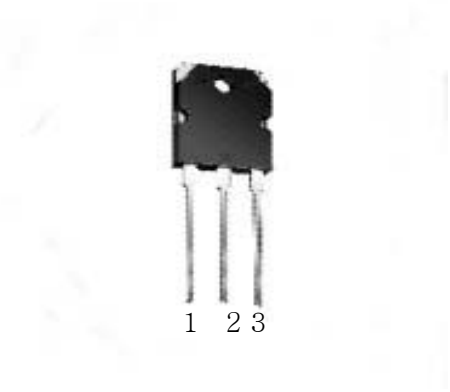

1.BASE
2.COLLECTOR
3.EMITTOR

2SD2560

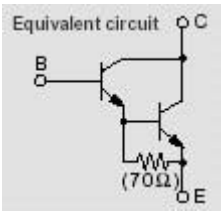

2SB1647

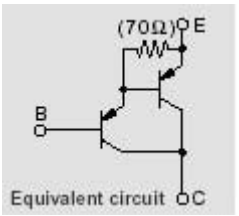

13. LM19CIZ 2.4V TO-92
(DSP: PO91 MAIN: PO71)

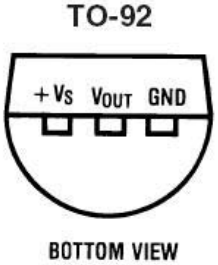

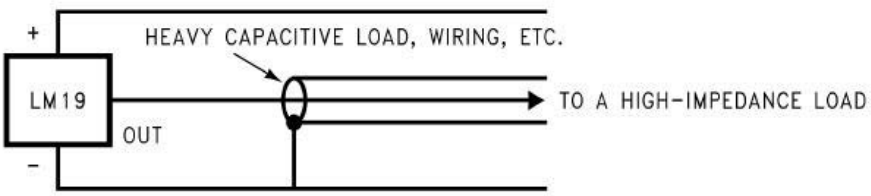

•OTHERS

1. FL HCA-18-BT-19GINK (FRONT FL1)

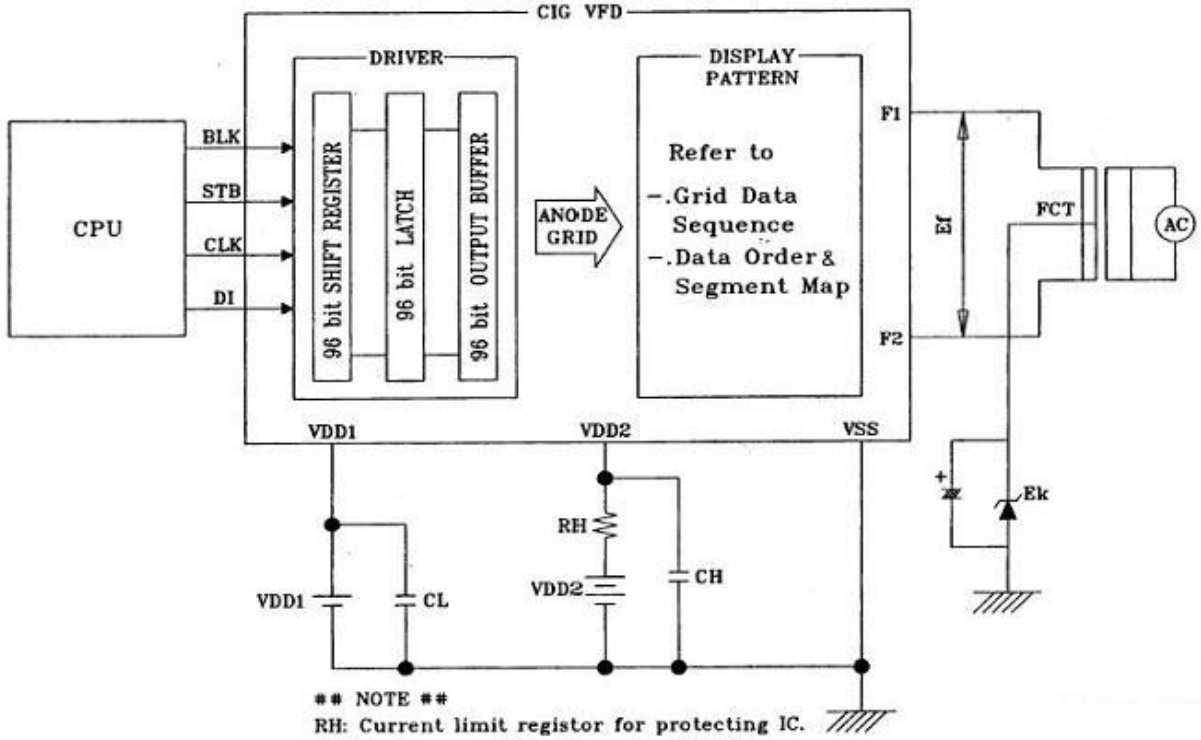

NOTE
RH: Current limit registor for protecting IC.
CH,CL: Low pass filter for noise filtering.
RH: 22Ω, CH: 0.1 μF, CL: 0.1 μF
FCT: Filament is center-tab grounded.

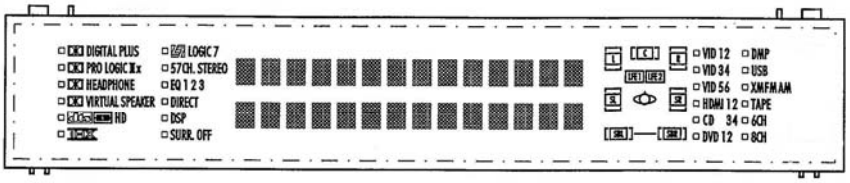

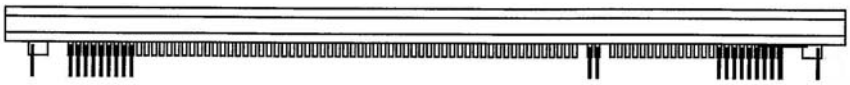

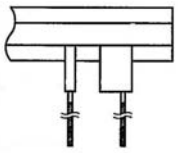

OTHER F-LEAD
LEAD DETAILS

LEAD FREE SOLDER

CONNECTION

N NO.	104	103	102	101	100	99	98	97	96	95	94	93	92	91	90 ~ 33	32	31	30	29	28 ~ 15	14 ~ 6	5	4	3	2	1
NECTION	F2	NX	NX	NP	NP	VH	LGND	PGND	CLK	NC	SI	BK	LAT	VDD	NX	NP	Fd	Fd	NP	NX	NC	NP	NP	NX	NX	F1

1) F1,F2 --- Filament
2) NP ------ No pin
3) NX ------ No extend pin
4) DL ------ Datum Line
5) LGND ---- Logic GND pin
6) PGND ---- Power GND pin
7) NC ------ No connection
(NC pin should be electrically open on the PC board)
8) Fd terminals are to be supplied through 47kΩ from VH.
9) Field of vision is a minimum of 28.6° from the upper side, 28.6° from the lower side.
10) Solder composition is Sn-3Ag-0.5Cu.
11) VH ------ High Voltage Supply pin
12) VDD ----- Logic Voltage Supply pin
13) BK ------ Driver Output Blanking
14) LAT ----- Latch Control Input
15) CLK ----- Shift Register Clock
16) SI ------ Serial Data Input

(unit in mm)

18-BT-19GINK
OUTER DIMENSION

2. VCXO 24M576HZ (DSP Y413)

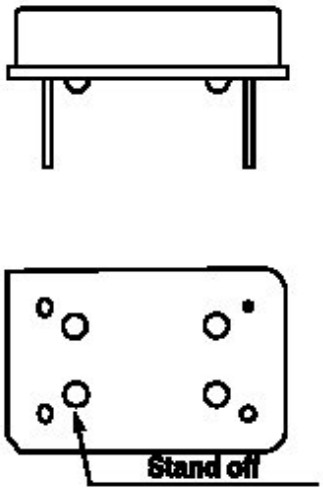

<14 PIN DIP>

PIN	CONNECTION
# 1	INH or No Connection
# 7	Ground
# 8	Output
# 14	Vdc

3. OPTICAL RX YKC22-0733N (DSP: J411 J413 J414)

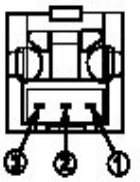

Pin connection
1. GND
2. Vcc
3. Input

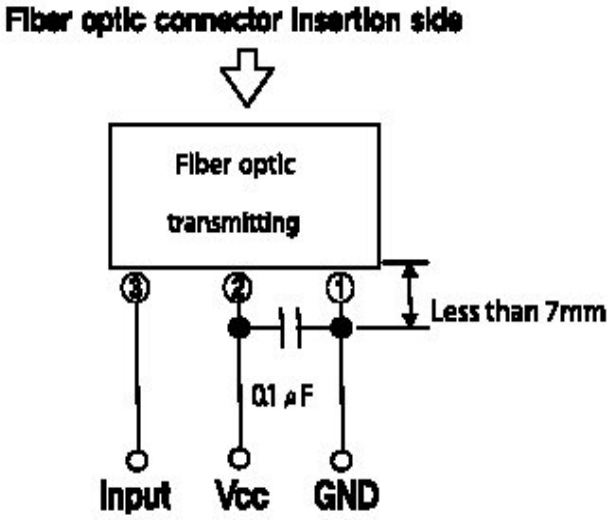

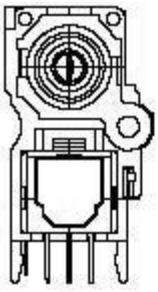

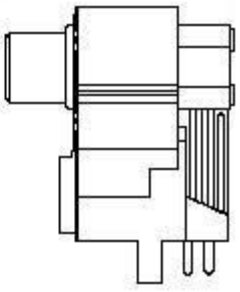

4. TX YKC22-0732N (DSP: J402)

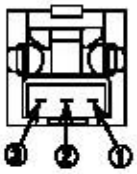

Pin connection
1. Output
2. GND
3. Vcc

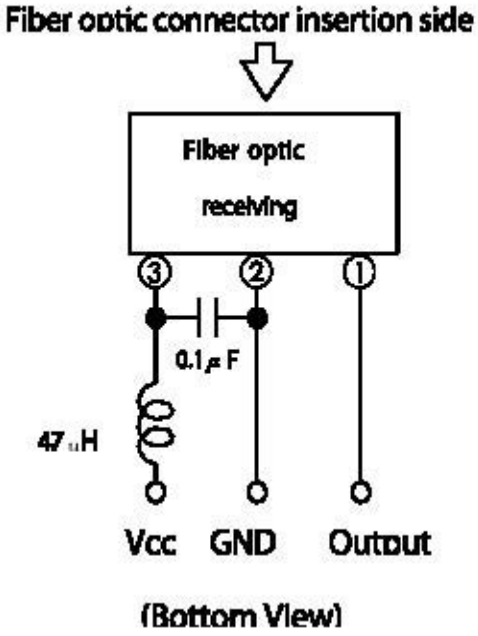

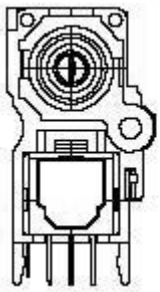

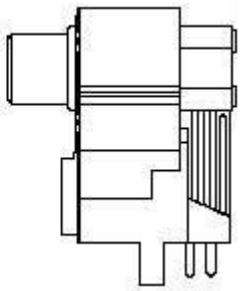

5. TORX177L (FRONT: NJ79)

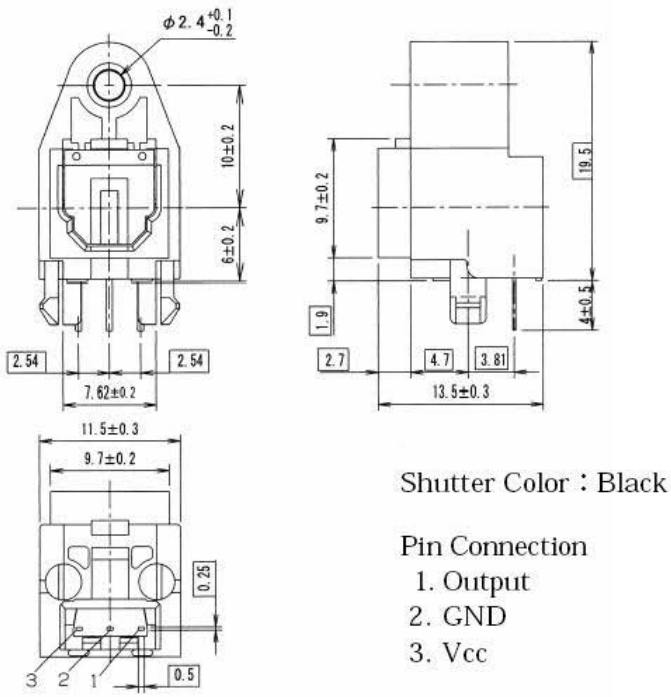

Shutter Color : Black

Pin Connection
1. Output
2. GND
3. Vcc

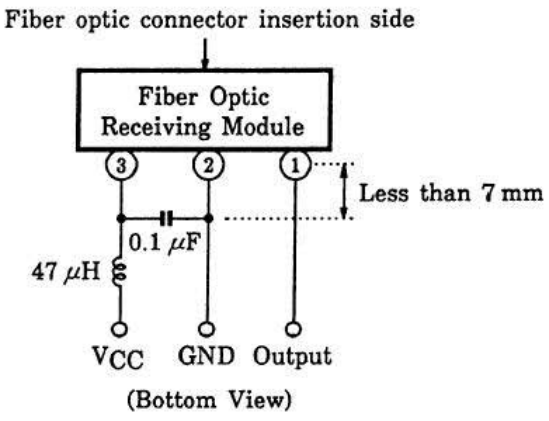

6. RPM6938-RSIP-A3 (FRONT: RM71)

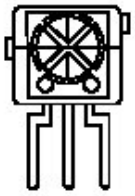

PIN NO.	
①	ROUT
②	GND
③	Vcc

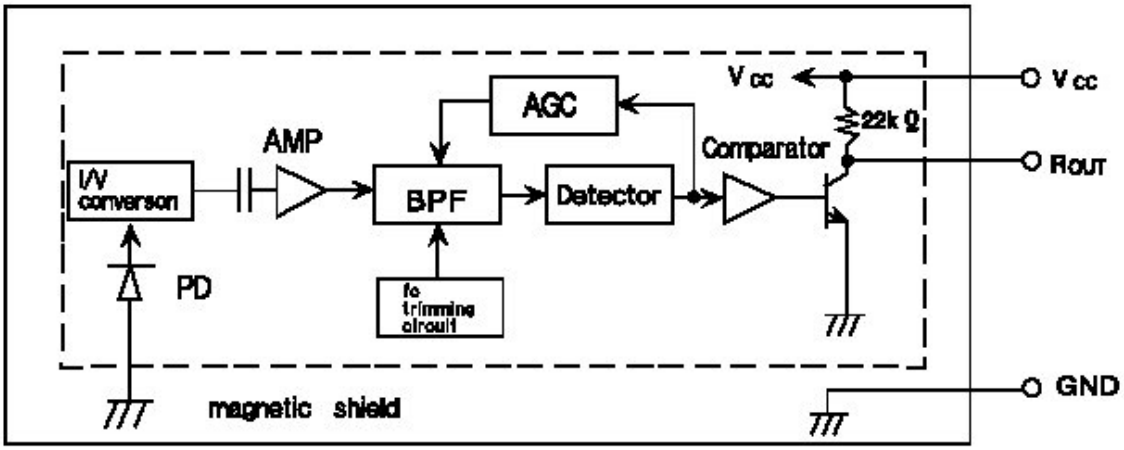

7. LP-200TL (FRONT: RM72)

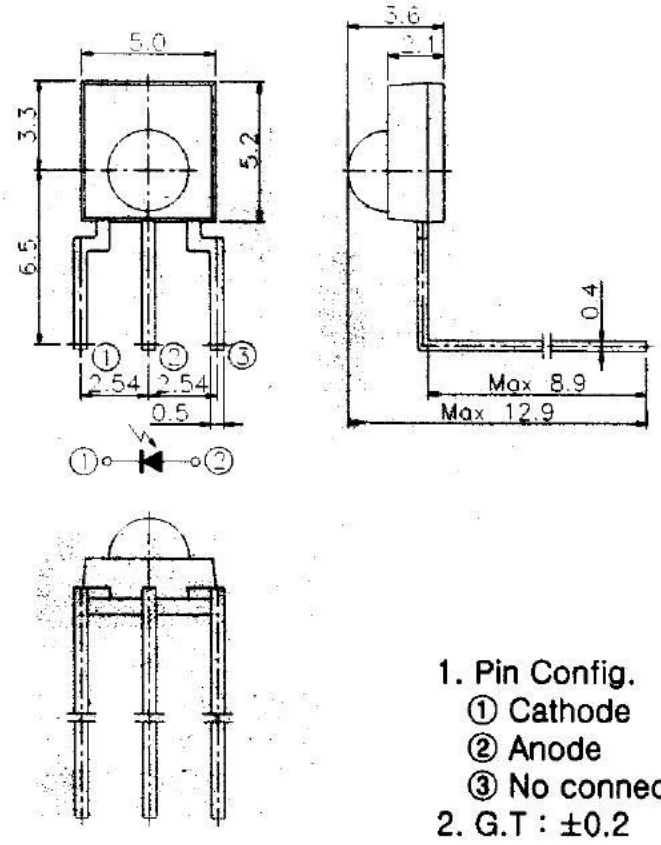

1. Pin Config.
   ① Cathode
   ② Anode
   ③ No connect
2. G.T : ±0.2

PROCESSOR BOARD (BOTTOM VIEW)

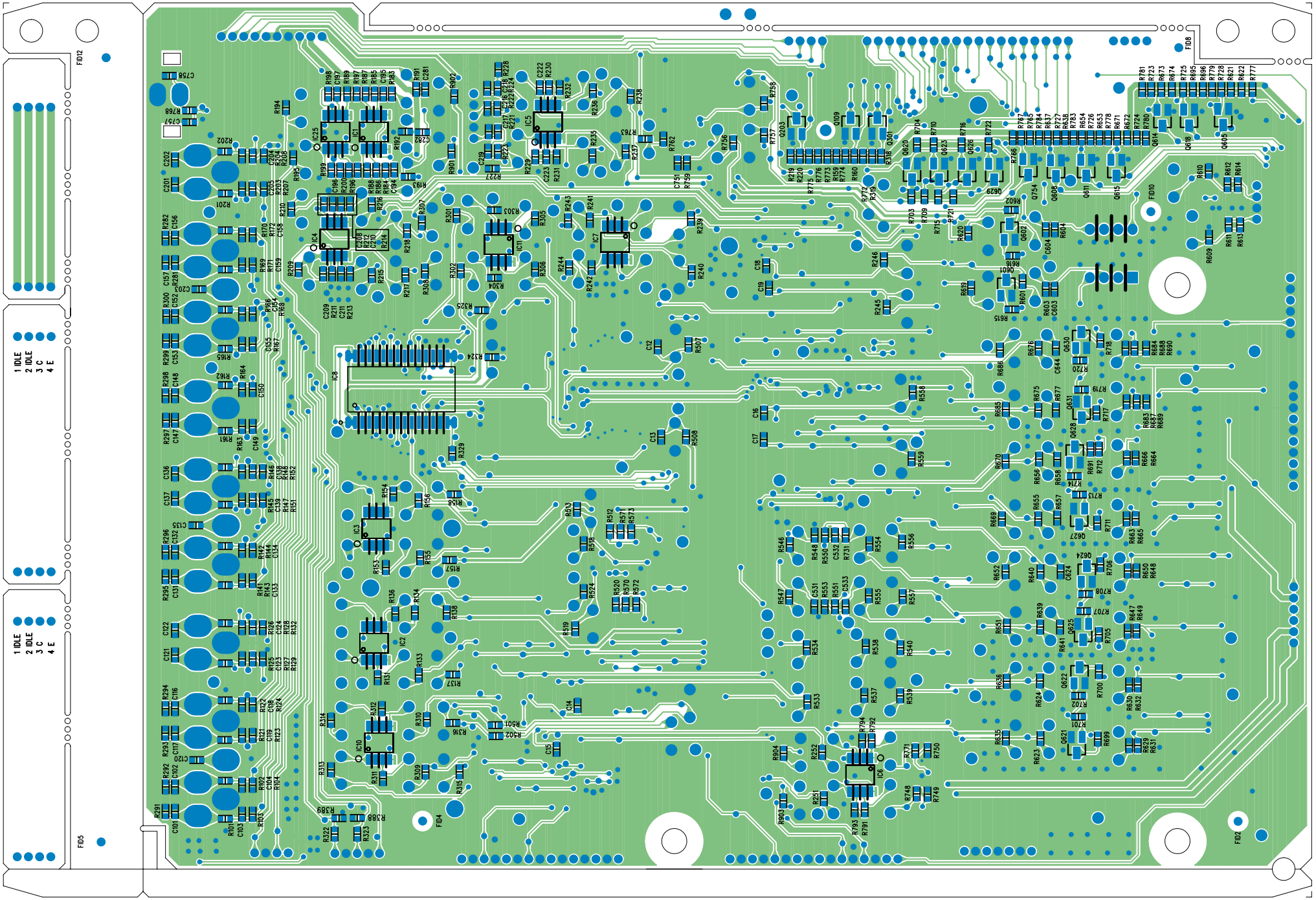

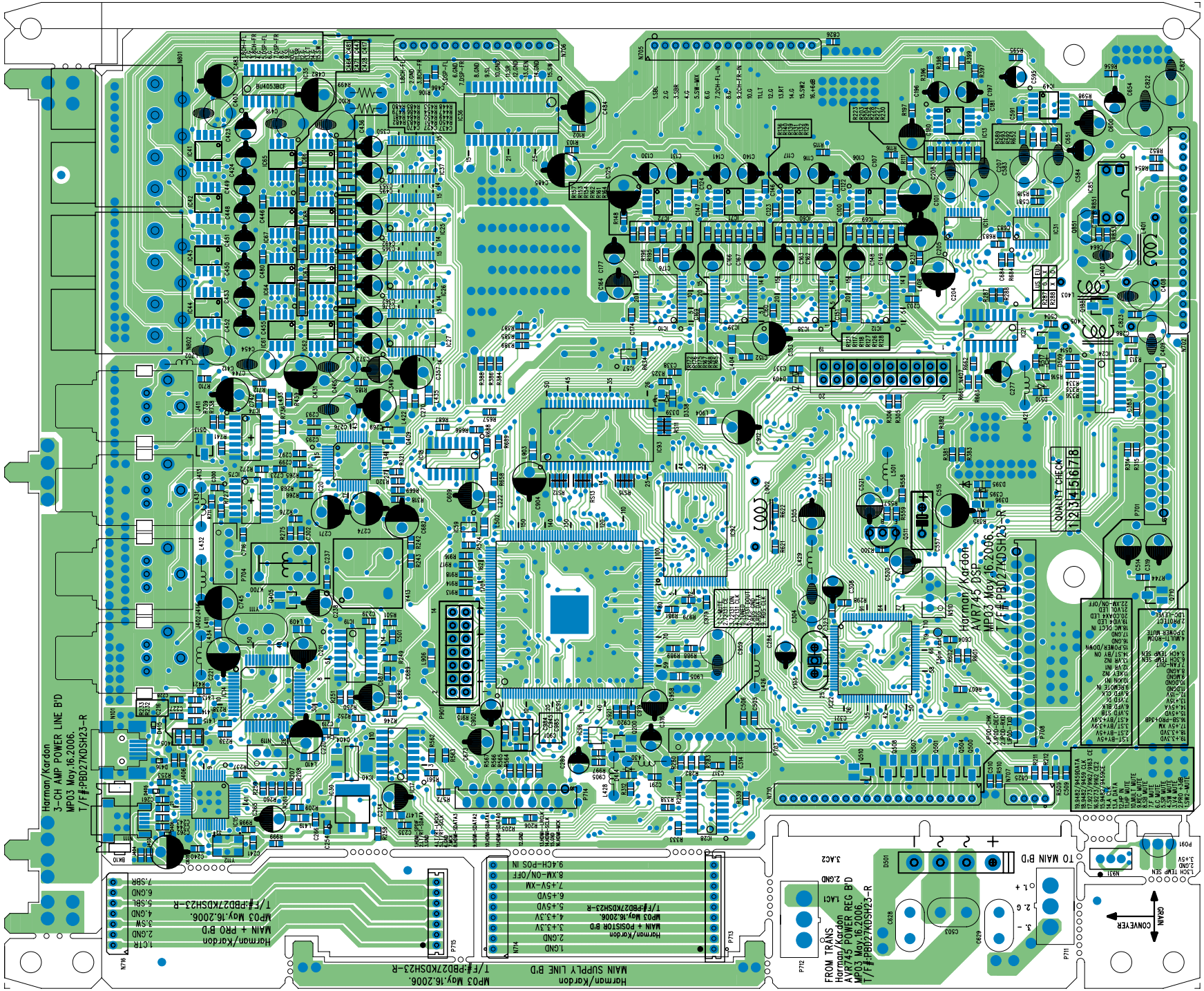
Harman/Kardon
3-CH AMP POWER LINE B'D
MP03 May.16.2006.
T/F#:PBD27KDSH23-R
Harman/Kardon
AVR745 DSP
MP03 May.16.2006.
T/F#:PBD27KDSH23-R
QUALITY CHECK
1 2 3 4 5 6 7 8
TO MAIN B'D
FROM TRANS
Harman/Kardon
AVR745 POWER REG B'D
MP03 May.16.2006.
T/F#:PBD27KDSH23-R
CONVERTER
Harman/Kardon
MAIN + PRO B'D
MP03 May.16.2006.
T/F#:PBD27KDSH23-R
Harman/Kardon
MAIN + POSISTOR B'D
MP03 May.16.2006.
T/F#:PBD27KDSH23-R
Harman/Kardon
MAIN SUPPLY LINE B'D
MP03 May.16.2006.
T/F#:PBD27KDSH23-R

FRONT BOARD (BOTTOM VIEW)

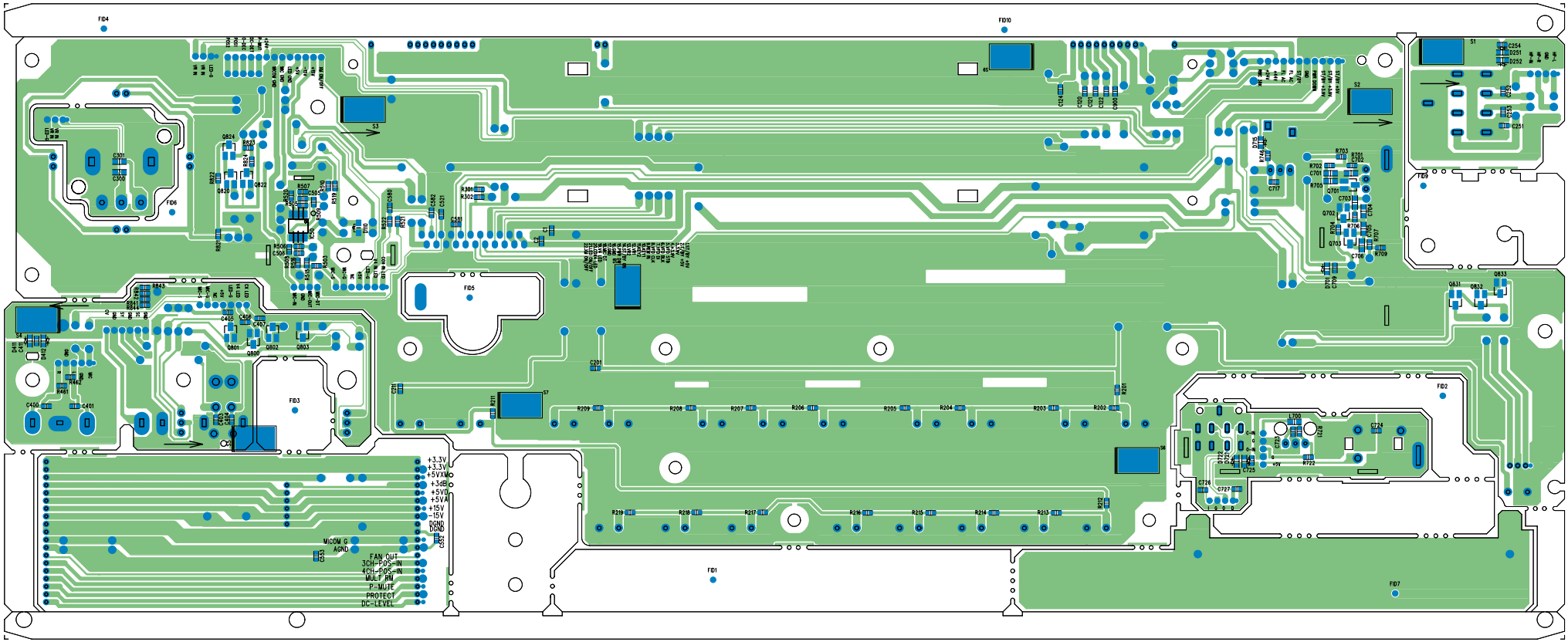

FRONT BOARD (TOP VIEW)

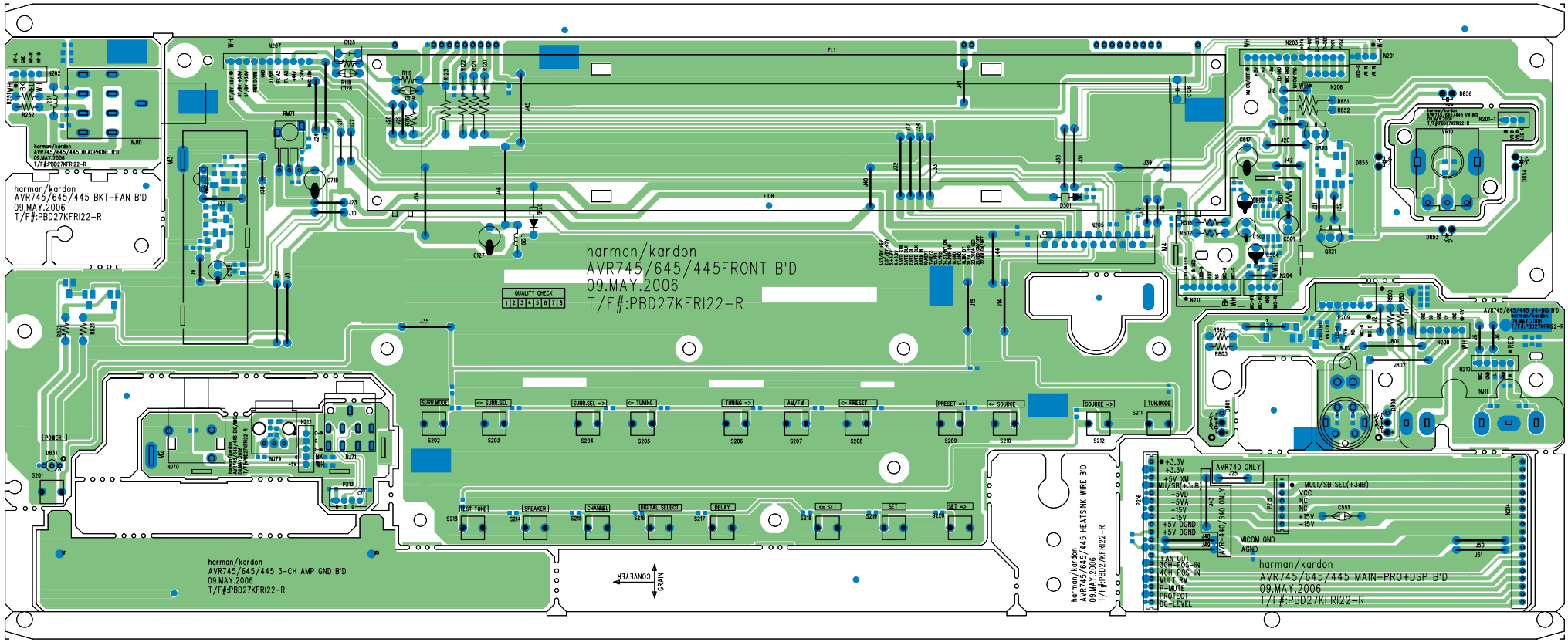

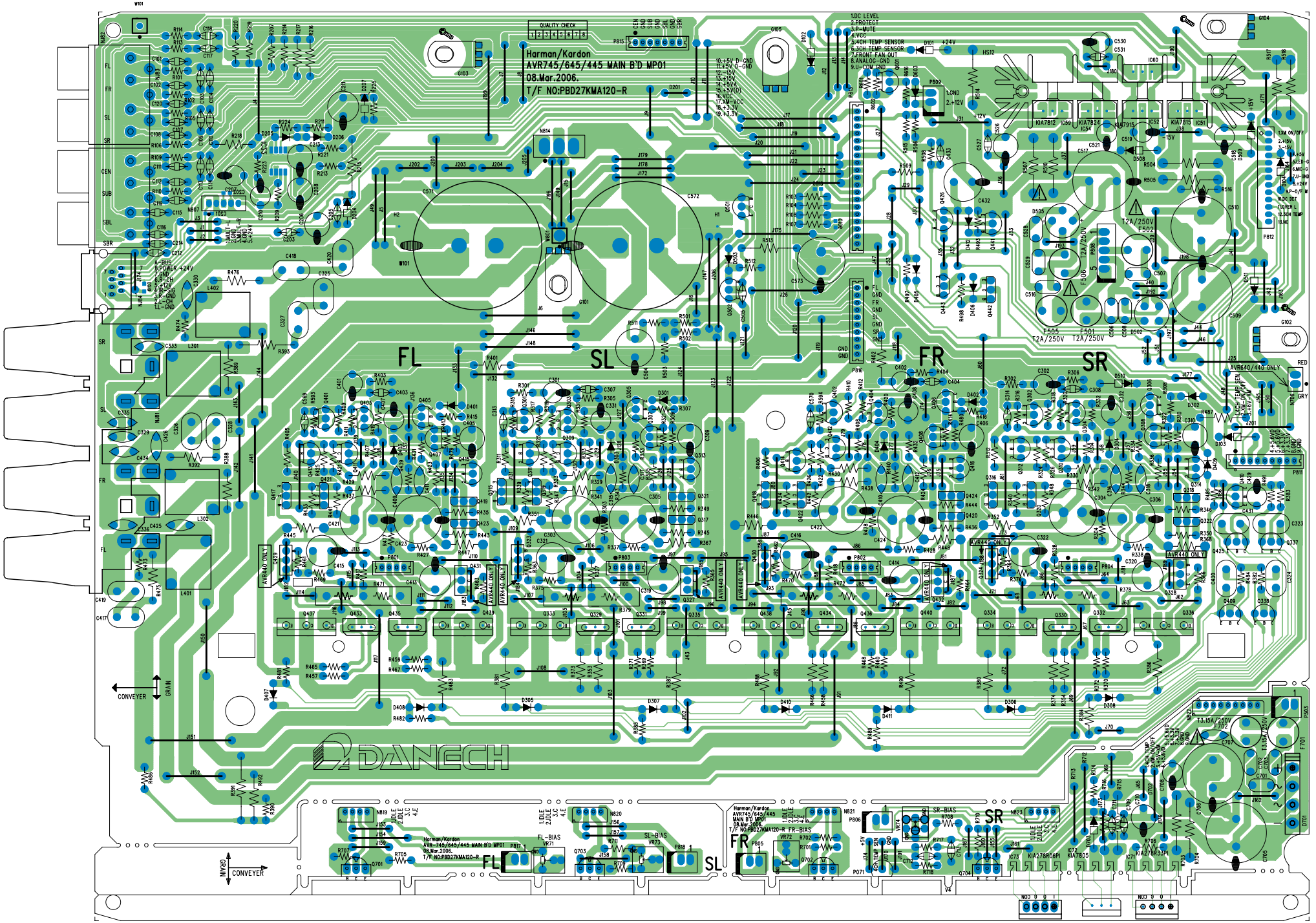
Harman/Kardon
AVR745/645/445 MAIN B'D MP01
08.Mar.2006.
T/F NO:PBD27KMA120-R
FL
SL
FR
SR
DANECH
CONVEYER
GRAIN

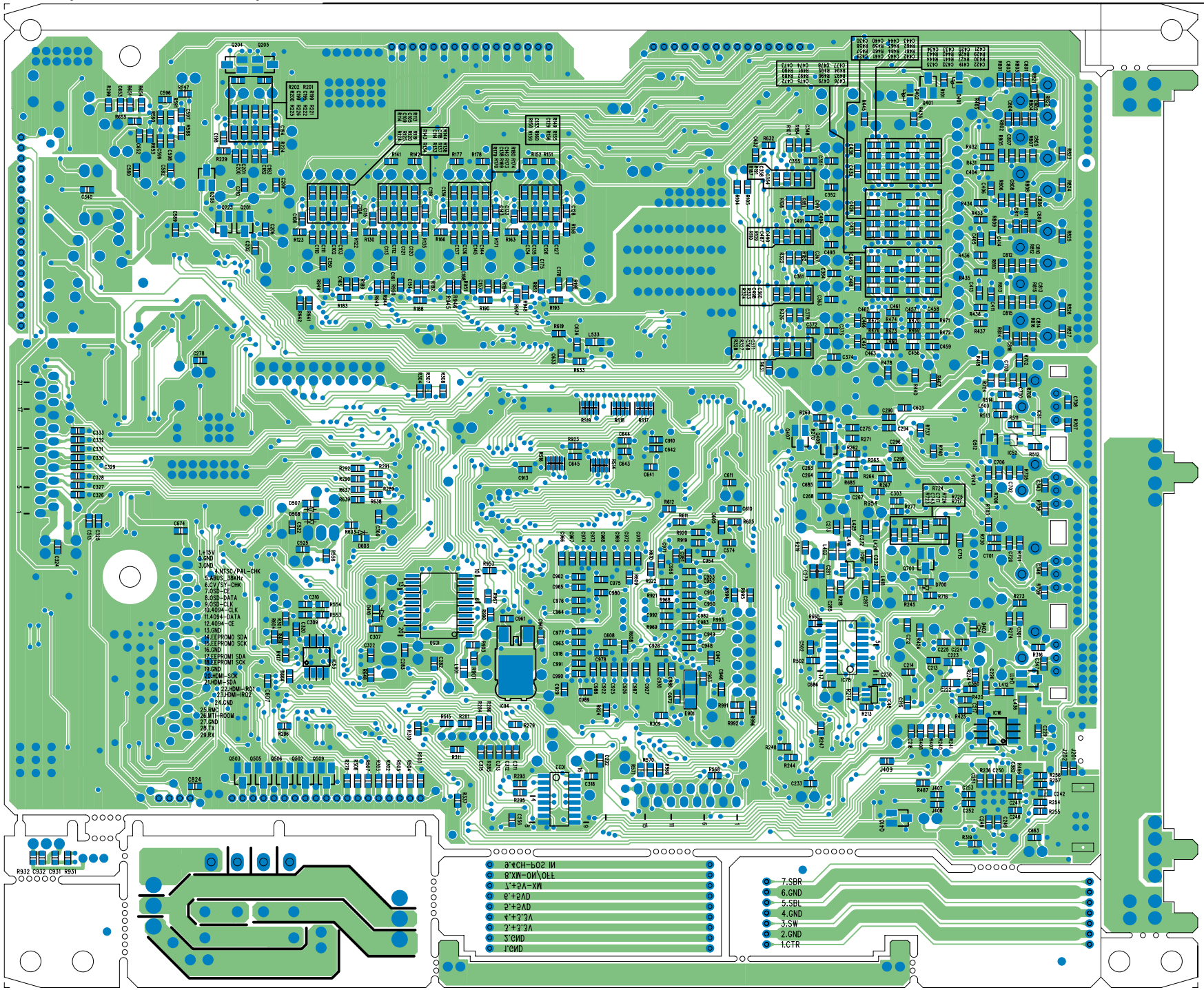
7.SBR
6.GND
5.SBL
4.GND
3.SW
2.GND
1.CTR

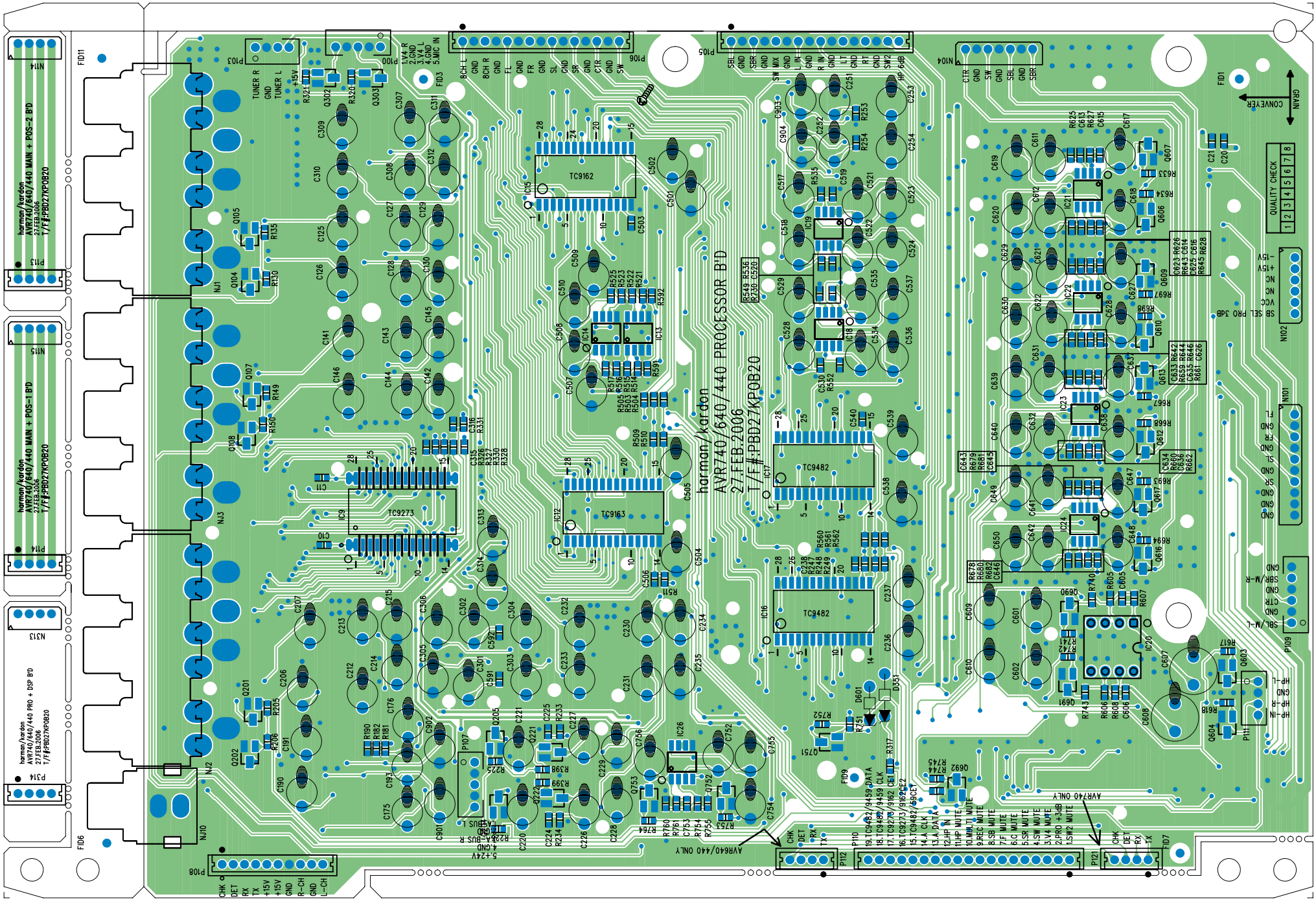
harman/kardon
AVR740/640/440 PROCESSOR B'D
27.FEB.2006
T/F#:PBD27KP0B20
TC9162
TC9273
TC9163
TC9482
TC9482
QUALITY CHECK
AVR740 ONLY
AVR640/440 ONLY

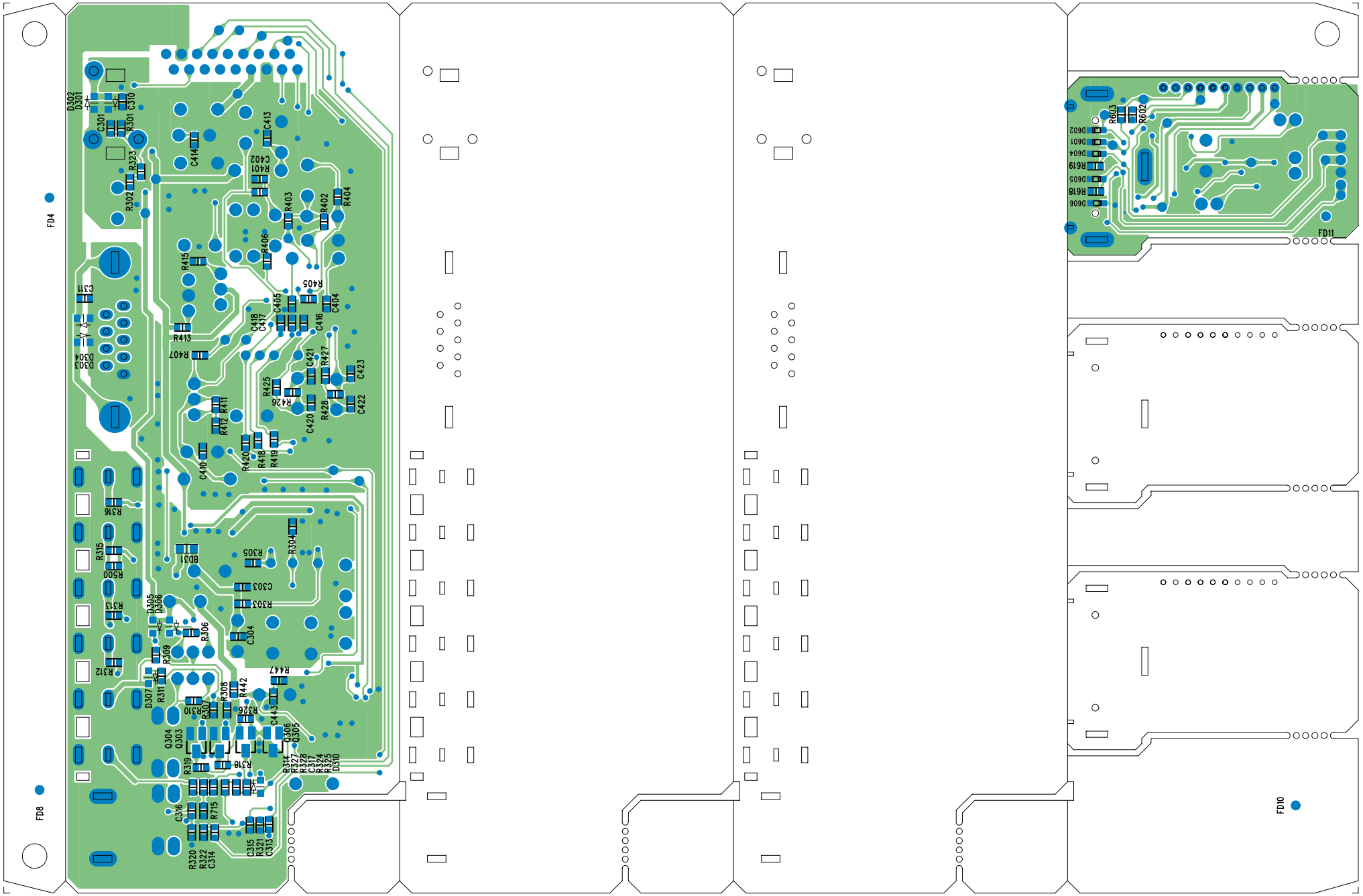
FD4
FD8
FD10
FD11
D302
D301
C310
C301
R301
R323
C414
C413
C402
R401
R302
R403
R402
R404
R406
R415
R405
C405
C404
C416
C418
C417
R413
R407
C421
R427
C423
R425
R426
R411
R412
C420
R428
C422
R420
R418
R419
C410
R316
R315
R305
R304
C303
R303
R500
D305
D306
R306
C304
R309
R312
R447
R308
R442
R307
R310
R326
C443
D307
R311
Q304
Q303
Q306
Q305
R319
R318
R317
R327
C317
R324
R325
D310
C316
R715
R320
R322
C314
C315
R321
C313
R603
R602
D602
D601
D604
R619
D605
R618
D606

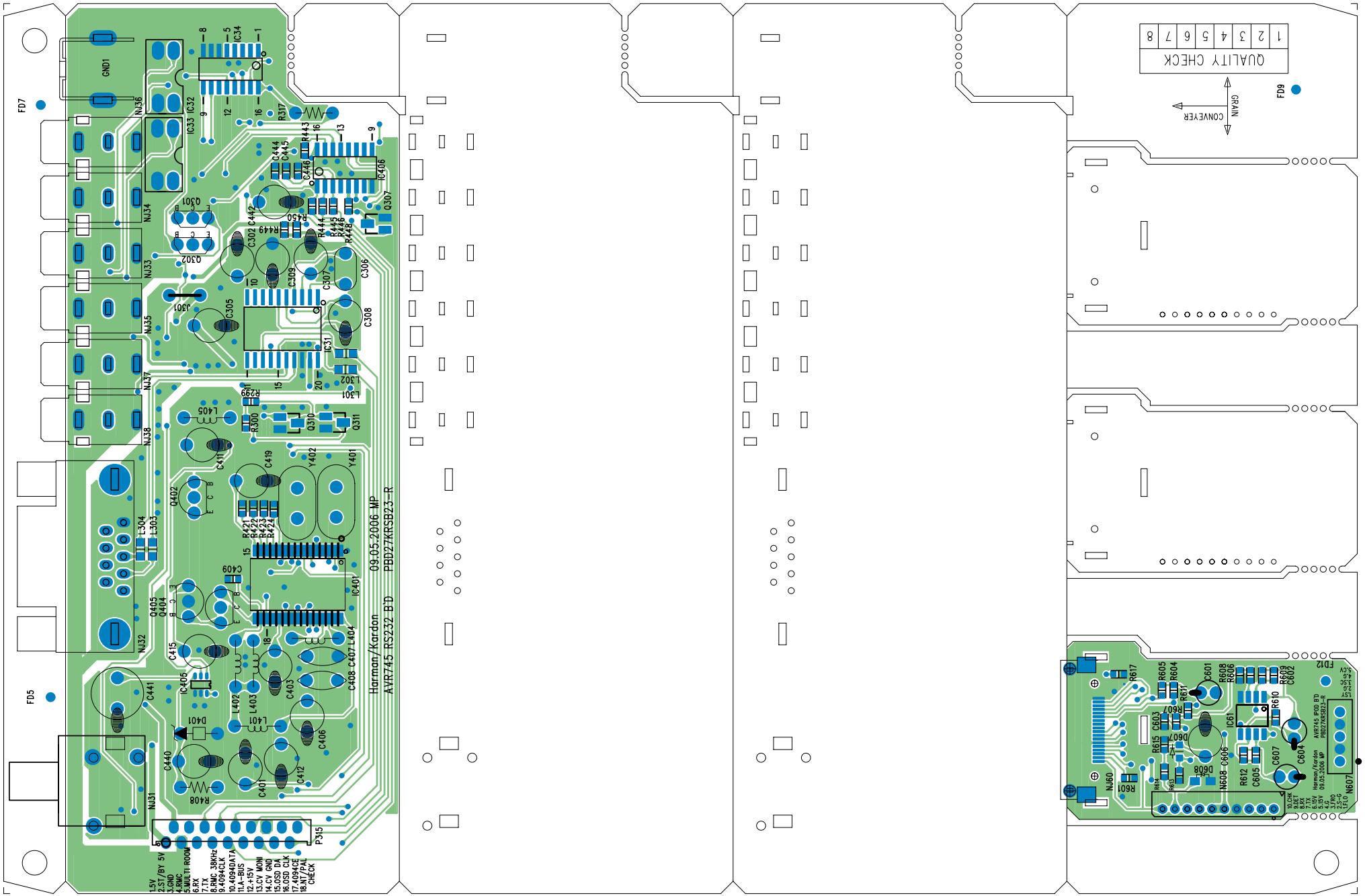
QUALITY CHECK
1 2 3 4 5 6 7 8
GRAIN
CONVEYER
FD7
FD5
FD9
FD12
Harman/Kardon
AVR745 RS232 B'D
09.05.2006 MP
PBD27KRSB23-R
1.5V
2.ST/BY 5V
3.GND
4.RMC
5.MULTI ROOM
6.RX
7.TX
8.RMC 38KHz
9.4094CLK
10.4094DATA
11.A-BUS
12.+15V
13.CV MONI
14.CV GND
15.OSD DA
16.OSD CLK
17.4094CE
18.NT/PAL
CHECK

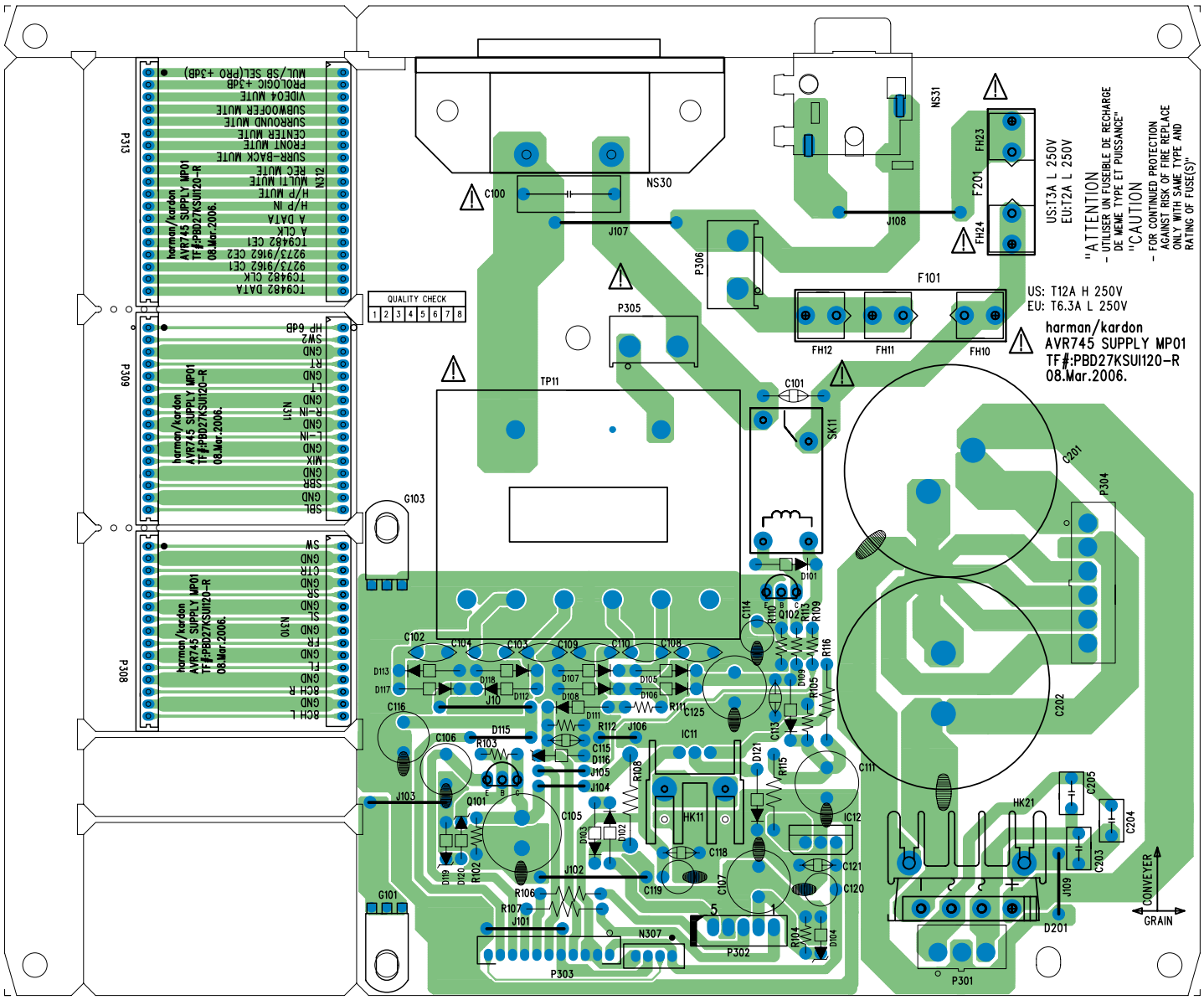
harman/kardon
AVR745 SUPPLY MP01
TF#:PBD27KSUI20-R
08.Mar.2006.
US: T12A H 250V
EU: T6.3A L 250V
"ATTENTION
- UTILISER UN FUSEIBLE DE RECHARGE DE MEME TYPE ET PUISSANCE"
"CAUTION
- FOR CONTINUED PROTECTION AGAINST RISK OF FIRE REPLACE ONLY WITH SAME TYPE AND RATING OF FUSE(S)"
QUALITY CHECK
CONVEYER
GRAIN

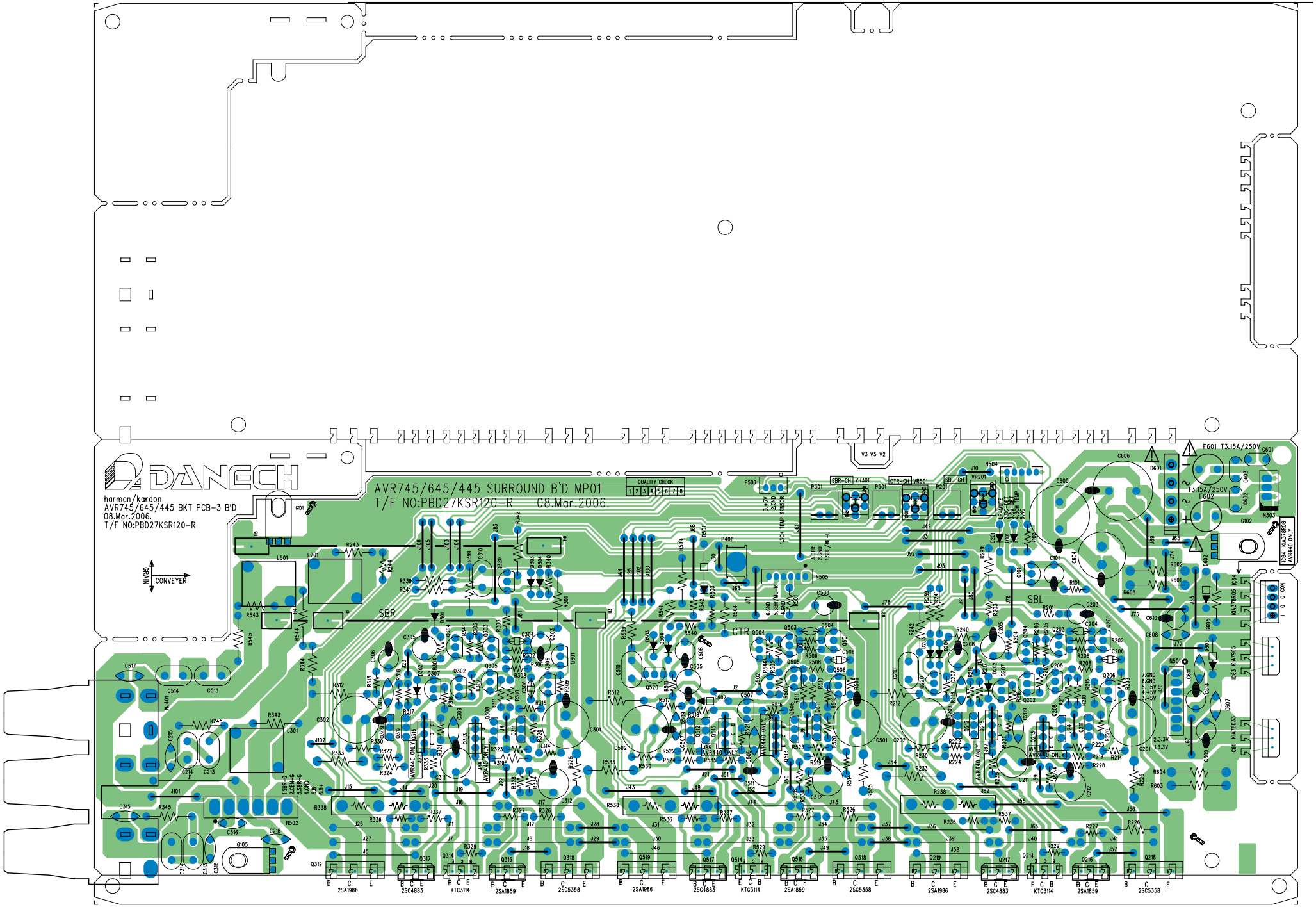
DANECH
harman/kardon
AVR745/645/445 BKT PCB-3 B'D
08.Mar.2006.
T/F NO:PBD27KSR120-R
AVR745/645/445 SURROUND B`D MP01
T/F NO:PBD27KSR120-R 08.Mar.2006.
QUALITY CHECK
CONVEYER
SBR
CTR
SBL
F601 T3.15A/250V
F602 T3.15A/250V
2SA1986
2SC4883
KTC3114
2SA1859
2SC5358

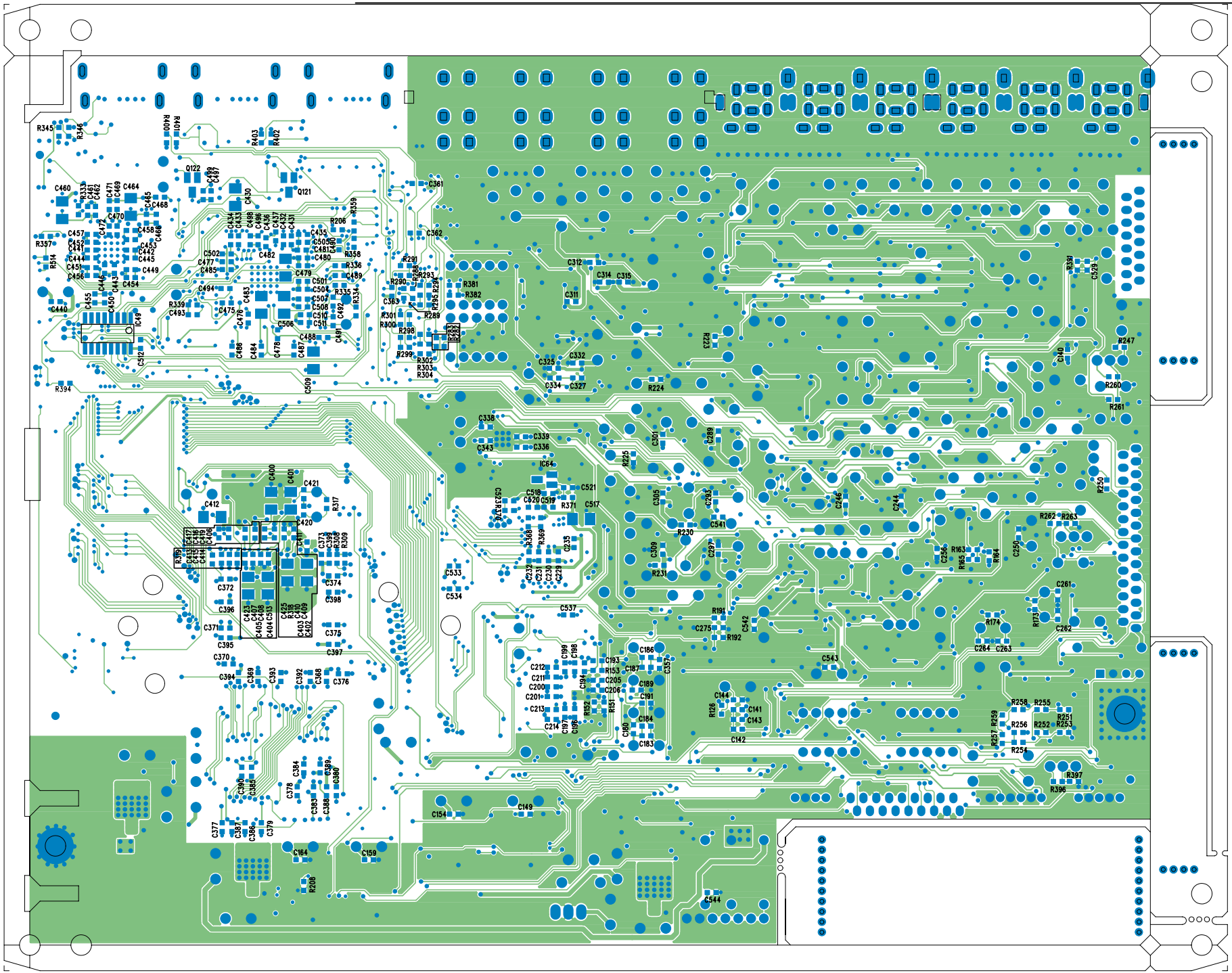

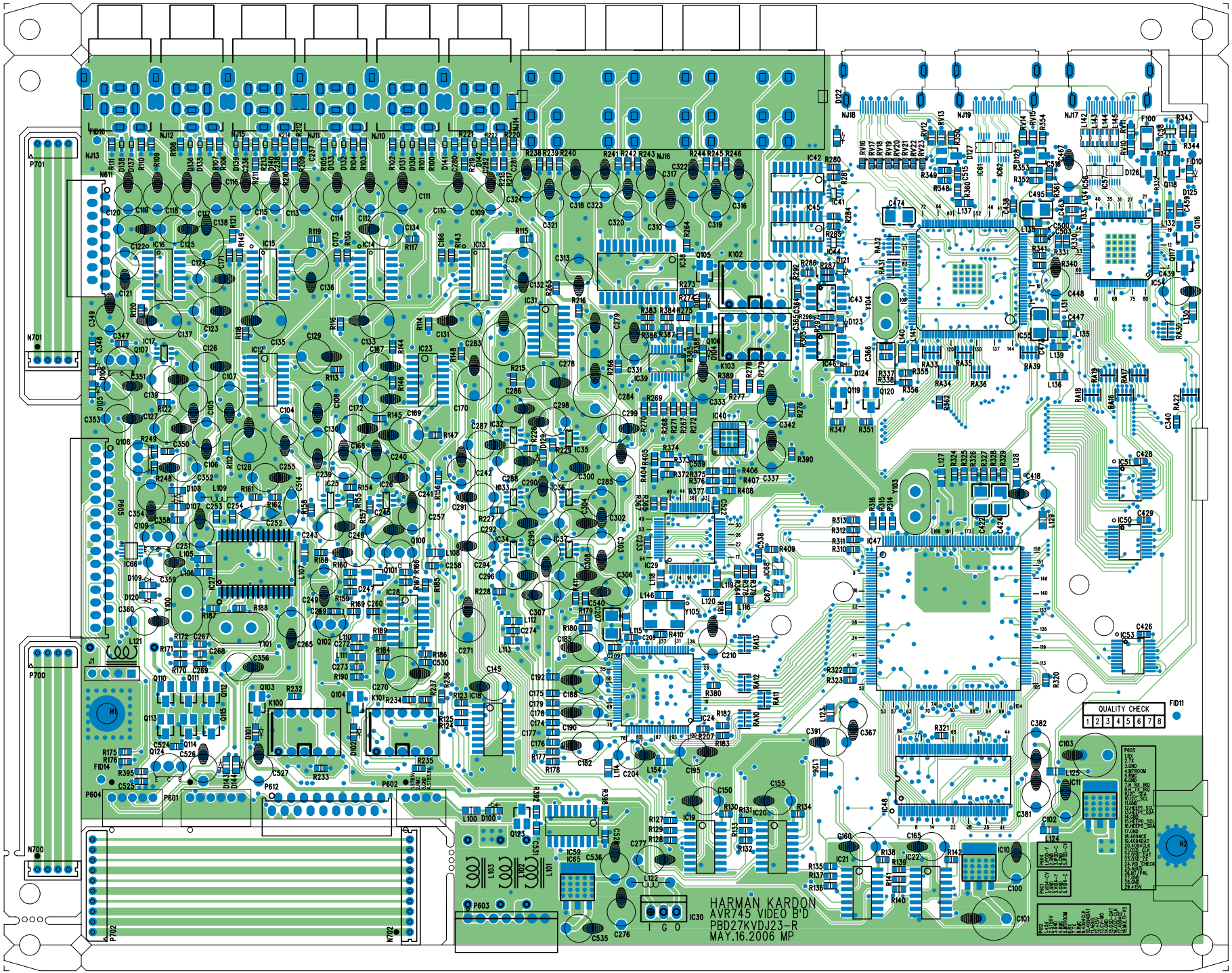
HARMAN KARDON
AVR745 VIDEO B'D
PBD27KVDJ23-R
MAY.16.2006 MP
QUALITY CHECK
1 2 3 4 5 6 7 8

AVR745 Electrical Parts List		
Ref. Designator	Part Number	Description
DSP PCB ASS'Y		
Capacitors		
C407 C408 C409	H03-CEHEC02275E-R	CE 220UF +20% 10.0V D6.3XL11 P5MM 85C SK 220/10V 5 X11
C959	H03-CEHEC0477MN-R	CE 470U0F +20% 10.0V 6.3X11 85C P5MM SK 470/10V 6.3 X11
C106 C107 C116 C117 C130 C131 C140 C141 C148 C149 C162 C163 C166 C167 C176 C177 C196 C197 C277 C284 C289 C308 C316 C350 C353 C362 C365 C373 C376 C423 C424 C448 C449 C450 C451 C452 C453 C492 C495 C595 C651 C654 C902	H03-CEHFC01062S-R	CE 10UF +20% 16V D4XL7 P2.5MM 2000hours 85C
C101 C125 C153 C204 C205 C220 C221 C269 C271 C274 C357 C431 C482 C483 C484 C485 C515 C635 C682 C744 C745 C904 C912	H03-CEHFC01072S-R	CE 100UF +20% 16V D6.3XL7 P2.5MM 2000hours 85C
C403 C412 C418 C436 C454 C465	H03-CEHFC01075E-R	CE 100UF +-20% 16.0V D5XL11 P5MM 85C SK 100/16V 5 X11
C180 C211 C234 C238 C265 C305 C319 C514 C600 C609 C673 C687 C958	H03-CEHFC04762S-R	CE 47UF +20% 16V D5XL7 P2.5MM 2000hours 85C
C821 C822	H03-CEHGC01075E-R	CE 100U0F +20% 25.0V 6.3X11 85C P5MM SK 100/25V 6.3 X11
C520	CEHIC01042S-R	CE 100NF +20% 50V SSE TYPE D4XL7 P2.5MM 85C
C207 C208 C583 C584	H03-CEHIC01055E-R	CE 1UF +20% 50V D5XL11 P5MM 85C SK 1/50V 5 X11
C276	H03-CEHIC0474NN-R	CE 0.47UF +20% 50.0V 85C 5X11 P5MM
C304	H03-CEHIC04755E-R	CE 4U7F +20% 50.0V 85C P5MM SK 4.7/50V 5 X11
C503 C628 C629	CFIOC0104NN-R	CPM 100N0F +10% 250.0V
C521	H03-CEMIC04752H-R	CAP ELEC 4.7UF 50V M 5X11 SHL P2.5MM
C301 C311 C312 C313 C315 C327 C328 C330 C331 C419 C420 C429 C430 C434 C435 C444 C445 C456 C457 C462 C463 C472 C473 C478 C479 C801 C802 C803 C804 C805 C806 C807 C808 C809 C810 C811 C812 C813 C814 C815 C816	CZJII0101BE-R	CAP CHIP 100P0F +5% -5% 50.0V NP0 0603
C223	CZJII0101CE-R	CAP CERAMIC/CHIP 100PF 50V CH J NPO 0805
C222	CZJII0102CC-R	CAP CHIP 1nF 50V X7R J 0805
C700 C702 C720 C743	CZJII0220BE-R	CCCFMIC 22P0F +5% -5% 50.0V NP0
C224 C225	CZJII0270BE-R	CAP CHIP 27P0F +5% -5% 50.0V NP0 0603
C263 C264 C309 C310 C632 C633	CZJII0330BE-R	CAP CHIP 33P0F +5% -5% 50.0V NP0 0603
C326 C329	CZJII0470BE-R	CAP CHIP 47P0F +5% -5% 50.0V NPO 0603
C194 C195 C198 C199	CZJII0471BE-R	CCCFMIC 470P0F +5% -5% 50.0V NP0
C132 C332 C333 C425 C426 C438 C439 C466 C467 C468 C469	CZKII0102BC-R	CAP CHIP 1N0F +10% -10% 50.0V X7R 0603
C701 C703 C706 C717	CZKII0103BC-R	CAP CHIP 10N0F +10% -10% 50.0V X7R 0603
C229 C380 C382 C596 C597 C685	CZKII0122BC-R	CAP CHIP 1N2F +10% -10% 50.0V X7R 0603
C104 C105 C108 C109 C114 C115 C118 C119 C128 C129 C133 C138 C139 C142 C143	CZKII0221BA-R	CAP CHIP 220PF 50V K SL 0603
C652 C653	CZKII0222BC-R	CAP CHIP 2N2F +10% -10% 50.0V X7R 0603
C182 C183 C200 C201 C598 C599	CZKII0272BC-R	CAP CHIP 2N7F +10% -10% 50.0V X7R 0603
C102 C103 C110 C111 C112 C113 C120 C121 C126 C127 C134 C135 C136 C137 C144 C145	CZKII0821BC-R	CAP CHIP 820P0F +10% -10% 50.0V X7R 0603

Ref. Designator	Part Number	Description
DSP PCB ASS'Y		
C150 C154 C157 C161 C165 C168 C175 C178 C202 C206 C209 C210 C212 C213 C214 C215 C217 C218 C226 C230 C232 C233 C242 C246 C247 C248 C249 C250 C251 C252 C253 C256 C267 C268 C272 C273 C275 C278 C282 C283 C292 C303 C306 C307 C318 C320 C322 C324 C325 C340 C343 C346 C347 C348 C351 C352 C354 C355 C358 C360 C361 C363 C364 C367 C368 C371 C372 C374 C375 C378 C404 C405 C406 C411 C413 C414 C421 C422 C432 C433 C440 C441 C442 C443 C458 C459 C460 C461 C474 C475 C476 C477 C487 C490 C491 C493 C494 C497 C498 C513 C522 C525 C574 C580 C582 C589 C607 C610 C611 C634 C641 C642 C643 C644 C645 C663 C672 C674 C686 C708 C715 C824 C903 C910 C913 C918 C922 C925 C926 C927 C928 C929 C930 C946~C954 C956 C960~C978 C980 C981 C982 C983 C986 C987 C988 C989 C990 C991 C992 C931 C932	CZZFI0104BF-R	CAP CHIP 100N0F +80% -20% 16.0V Y5V 0603
C240 C241	CSJIE0300BG-R	CAP,CHIP FORM 30P +/-5% 50V C0G 0603
C314 C486 C825	CZJII0101BE-R	CAP CHIP 100P0F +5% -5% 50.0V NP0 0603
C505 C506	CZJII0101BE-R	CAP CHIP 100P0F +5% -5% 50.0V NP0 0603 EUROPE ONLY
C302	CZJII0220BE-R	CCCFMIC 22P0F +5% -5% 50.0V NP0
C683 C684	CZJII0330BE-R	CAP CHIP 33P0F +5% -5% 50.0V NP0 0603
C227 C228	CZJII0470BE-R	CAP CHIP 47P0F +5% -5% 50.0V NPO 0603
C100 C122 C123 C124 C146 C147 C151 C152 C160 C169 C174 C181 C203 C216 C219 C235 C237 C239 C243 C244 C254 C266 C270 C286 C291 C293 C295 C297 C300 C317 C321 C323 C337 C338 C383 C417 C427 C428 C437 C446 C447 C455 C464 C470 C471 C480 C481 C504 C510 C581 C591 C604 C664 C689 C723 C742 C823 C826 C901 C905 C919 C920 C921 C945 C979 C984 C985	CZZFI0104BF-R	CAP CHIP 100N0F +80% -20% 16.0V Y5V 0603
C395	CZKII0103BC-R	CAP CHIP 10N0F +10% -10% 50.0V X7R 0603
C557	H03-CEZXA0479MN-R	CM 47MI0F +80%-20% 5.5V 70C SCDA5R5473V
Semiconductors		
Q851	H03-TRKTA107MNA-R	TR-SLPSWA KRA107M PNP
Q511	H03-TRMPSA06NNA-R	TR-SLPLF MPSA06 NPN 500MI0A TO-92
D403 D410 D507 D508 D603 D700	H03-DS1S50094NB-R	D-SLP 1SS355 35.0V 225MI0A
D401 D402	H03-DSUDZ09V1NB-R	D-ZENER UDZS 9.1B 9.1V 200MI0W
IC53	H03-IC24LC256D2-R	IC CMOS SERIAL EEPROM 24LC256T-I/SNG SOIC-8P(150MIL)
IC16	H03-IC24LC64ID2-R	24LC64-I/SNG SOIC-8P(150mil) Serial EEPROM
IC45	H03-IC74AHC1G14-R	74AHC1G14 SOT753 Inverting Schmitt trigger
IC78	H03-IC74LVC254D-R	IC SN74LVC257AD SOIC-16 Quadruple 2-Line To 1-Line Data Selector/Multiplexer
IC50	H03-IC74VC244G5-R	IC-LOGIC 74VHC244MX or 74VHC244MX_NL M20B INVERTER CMOS

Ref. Designator	Part Number	Description
DSP PCB ASS'Y		
IC23	H03-ICBU4094BD3-R	IC CMOS BU4094BCF SOP16 8-bit compatible shift / store register
IC94	H03-ICM317TO252-R	IC 3-TERMINAL POS VOL REG NJM317DL1-TE1 TO-252
Q401 Q407 Q408 Q411 Q502 Q503 Q505 Q506 Q509 Q512 Q700	H03-TSKRC107SND-R	KRC107S SOT-23 NPN
D405 D406 D415 D416	H03-DS05GBUSCNB-R	DIODE PG05GBUSC
D338 D404 D409 D414 D509 D510	H03-DS1S50094NB-R	D-SLP 1SS355 35.0V 225MI0A
D339	H03-DSUDZ05V1NB-R	DIODE ZENER UDZ5.1B 5.1V 200MI0W
IC22	H03-IC70F3261E1-R7	UPD70F3261YGC-8EA-A LQFP100 32-bit single-chip microcontroller
IC96	H03-IC74CB3T3D2-R	IC SN74CB3T3306DCTR SSOP-8 Dual Bus Switch Voltage Translator
IC57 IC59	H03-IC74LC1G1DL-R	IC SINGLE SCHMITT BUFFER SN74LVC1G17DBVR SOT(SOT-23)DBV
IC17 IC18 IC19	H03-IC74LVC254D-R	IC SN74LVC257AD SOIC-16 Quadruple 2-Line To 1-Line Data Selector/Multiplexer
IC10 IC12 IC38 IC39	H03-ICAD1852JDA-R	IC 192Khz 24bit DAC AD1852JRSZ SSOP28
IC20	H03-ICAK4114VE8-R	IC 192Khz 24bit INTERFACE AK4114VQ LQFP48
IC25 IC26 IC27 IC37	H03-ICAK5385ADA-R	IC A/D CONVERTOR AK5385AVF VSOP28
IC92	H03-ICAT49BV163-R	IC FLASH MEMORY AT49BV163DT(or AT)-70TU TS
IC21	H03-ICBU4051BD3-R	IC ANALOG MPX/DEMPX BU4051BCF SOP16
IC35	H03-ICBU4053BB4-R	IC BU4053BCF SOP16 ANALOG MPX/DEMPX
IC24 IC28	H03-ICBU4094BD3-R	IC CMOS BU4094BCF SOP16 8-bit compatible shift / store register
IC40	H03-ICDS1233ADK-R	IC 3.3V ECONO RESET DS1233AZ-15+TR SOT-223
IC93	H03-ICK4S1616UC-R	K4S161622H-UC60 OR UC80 TSOP50 512K x 16Bit x 2 Banks SDRAM
IC13 IC41 IC42 IC43 IC44 IC49 IC60 IC61 IC62 IC63 IC64 IC65 IC66 IC67 IC68 IC69 IC71 IC72	H03-ICLM02068D2-R	IC-OPERAMP NJM2068M-TE1 DUAL SOP8
IC74 IC75	H03-ICM74H04MD4-R	IC-LOGIC M74HCU04M1R INVERTER HCT
IC11 IC31	H03-ICS4391AKZZ-R	CS4391A-KZZ SOP20 24-BIT, 192 kHz STEREO DAC WITH VOLUME CONTROL
IC36	H03-ICTC9162CDA-R	IC CMOS TC9162CFG SOP28 HIGH VOLTAGE ANALOG FUNCTION SWITCH ARRAY
IC91	H03-ICTMS320DNN-R	IC FLOATING-POINT DSP TMS320DA610-250 PQFP208
IC14	H03-ICTUSB320EB-R	IC TUSB3200A TQFP52 USB Streaming Controller
IC15	H03-ICXMDIC00E8-R	IC DIGITAL TRANCEIVER XMDIC QFP48
IC51 IC52	H03-ICC1G125DCK-R	IC SINGLE BUS BUFFER GATE SN74LVC1G125DCKT SOT(SC-70)DCKT
Q710 Q188 Q200 Q405 Q409 Q500 Q501 Q504 Q507 Q508 Q510 Q513 Q514	H03-TSKRC107SND-R	KRC107S SOT-23 NPN
IC30	H03-ICCJT1173N3-R	IC VOLTAGE REGULATOR CJT117-3.3 SOT-223
D501	H03-DURS10040NA-R	RS1004 RS-10
IC85	H03-ICPC17T10B1-R	IC PHOTOCOUPLER PC-17T1 DIP4 KODENSHI
Resistors		
RS14 RS16 RS17 RS18 RS19	RN3AY0220NA-R	RES NETWORK RCA 22OHM 1/16W 5% CN34JT220
R271	RS1AD0183NA-R	18K ohm 1/16W 1% 0603
R234	RS1AD3091NA-R	RES CHIP 3.09K OHM 1/16W 1% 0603
R213	RS1AD3321NA-R	RES CHIP 3.32K OHM 1/16W 1% 0603
R214	RS1AD4751NA-R	RES.CHIP 4.75K 1/16W +/-1% 0603
C290 C294 C296 C298 R219 R310 R311 R631 C603 R953 R954 J201 J202 J407 J408 J409	RS3AD0000NA-R	RES CHIP, 0 R 1/16W +/-5%, 0603
R310 R311	RS3AD0000NA-R	RES CHIP, 0 R 1/16W +/-5%, 0603 USA ONLY
R244 R248 R274 R278 R302 R303 R503 R504 R505 R507 R508 R707 R708 R709	RS3AD0100NA-R	RMGCFMIC 10R0 OHM +5% 0603
R254 R255 R289 R290 R291 R292 R316 R405 R417 R418 R424 R426 R445 R467 R478 R511 R512 R569 R609 R610 R611 R612 R932 R570	RS3AD0101NA-R	RES CHIP,100R 1/16W +/-5%,0603

Ref. Designator	Part Number	Description
DSP PCB ASS'Y		
R104 R105 R256 R257 R284 R286 R293 R295 R337 R487 R604 R648 R655 R703 R704 R743 R803 R804 R807 R808 R811 R815 R816 R968	RS3AD0102NA-R	RES CHIP,1K 1/16W +/-5% ,0603
R281 R515	RS3AD0102NA-R	RES CHIP,1K 1/16W +/-5% ,0603 EUROPE ONLY
R101 R107 R108 R109 R110 R183 R187 R188 R190 R191 R193 R264 R267 R296 R304 R307 R308 R322 R323 R324 R326 R327 R328 R427 R428 R441 R442 R443 R444 R457 R458 R459 R460 R463 R464 R469 R470 R473 R474 R475 R476 R489 R490 R491 R492 R495 R496 R685 R923 R969 R991 R992 R993 R994 R995	RS3AD0103NA-R	RES CHIP,10K 1/16W +/-5% ,0603
R141 R142 R151 R152 R177 R178 R201 R202 R236 R419 R466 R556 R653 R702 R706 R724 R730 R801 R802 R805 R806 R809 R813 R814	RS3AD0104NA-R	RES CHIP,100K 1/16W +/-5% ,0603
R319	RS3AD0105NA-R	RES CHIP 1M 1/16W +5% 0603
R513 R514 R725	RS3AD0122NA-R	RMGCFMIC 1K2 OHM +5% 0603
R571	RS3AD0151NA-R	RMGCFMIC 150R0 OHM +5% 0603
R163 R285 R737 R740	RS3AD0153NA-R	RES CHIP,15K 1/16W,+/-5%,0603.
R919	RS3AD0182NA-R	RES CHIP,1.8K,1/16W,+-5%,0603.
R119 R120 R124 R125 R133 R134 R137 R138 R155 R156 R159 R160 R169 R170 R173 R174 R221 R222 R225 R226 R590 R591	RS3AD0202NA-R	RMGCFMIC 2K0 OHM +5% 0603
R429 R430 R461 R462 R471 R472 R493 R494	RS3AD0203NA-R	RMGCFMIC 20K0 OHM +5% 62MI5W 0603
R716	RS3AD0220NA-R	RES CHIP,22R 1/16W +/-5%,0603
R639	RS3AD0221NA-R	RMGCFMIC 220R0 OHM +5% 0603
R262 R263 R269 R270 R279 R309 R553 R554 R664 R924	RS3AD0222NA-R	RMGCFMIC 2K2 OHM +5% 0603
R181 R182 R184 R189 R192 R194 R198	RS3AD022ANA-R	RMGCFMIC 2R2 OHM +5% 0603
R723 R277	RS3AD0241NA-R	RES CHIP 240 OHM 1/16W +/-5% 0603
R812	RS3AD0362NA-R	RMGCFMIC 3K6 OHM +5% 0603
R247	RS3AD0390NA-R	RES,CHIP 39 OHM 1/16W +/-5% 0603
R726	RS3AD0391NA-R	RMGCFMIC 390R0 OHM +5% 0603
R920 R921 R922	RS3AD0392NA-R	RMGCFMIC 3K9 OHM +5% 0603
R568	RS3AD0470NA-R	RMGCFMIC 47R0 OHM +5% 0603
R637 R638 R931	RS3AD0471NA-R	RMGCFMIC 470R0 OHM +5% 0603
R122 R123 R130 R135 R158 R166 R171 R224 R229 R240 R241 R245 R407 R408 R420 R425 R440 R588 R603 R967	RS3AD0472NA-R	RES CHIP,4K7 1/16W +/-5%,0603
R301 R431 R432 R433 R434 R435 R436 R437 R438 R996	RS3AD0473NA-R	RES CHIP,47K 1/16W +/-5%,0603
R113 R114 R143 R144 R149 R150 R179 R180 R199 R200 R299 R597	RS3AD0561NA-R	RES CHIP,560R 1/16W +/-5%,0603
R810	RS3AD0682NA-R	RMGCFMIC 6K8 OHM +5% 0603
R273 R619 R632 R633 R700 R701 R705	RS3AD0750NA-R	RMGCFMIC 75R0 OHM +5% 0603
R821 R822 R823 R824 R825 R826 R827	RS3AD0823NA-R	RES,CHIP 82K,1/16W,+/-5%,0603
R654	RS3AD0272NA-R	RMGCFMIC 2K7 OHM +5% 0603
R651	RS3AD0680NA-R	RMGCFMIC 68R0 OHM +5% 0603
RS11 RS12 RS13 RS15	RN3AY0220NA-R	RES NETWORK RCA 22OHM 1/16W 5% CN34JT220

Ref. Designator	Part Number	Description
DSP PCB ASS'Y		
C716 R205 R206 R209 R211 R212 R238 R239 R258 R272 R381 R382 R383 R396 R397 R621 R622 R657 R712 R999 J301 J403 J404 J405 J406	RS3AD0000NA-R	RES CHIP, 0 R 1/16W +/-5%, 0603
C299 R251 R252 R561 R562 R563 R564 R565 R566 R567 R572 R687	RS3AD0100NA-R	RMGCFMIC 10R0 OHM +5% 0603
R102 R103 R111 R148 R197 R207 R208 R242 R243 R320 R385 R386 R387 R388 R598	RS3AD0101NA-R	RES CHIP,100R 1/16W +/-5%,0603
R106 R294 R325 R334 R335 R336 R338 R339 R395 R558 R607 R661 R662 R663	RS3AD0102NA-R	RES CHIP,1K 1/16W +/-5% ,0603
R265 R266 R268 R298 R305 R306 R314 R315 R509 R516 R517 R559 R601 R602 R744 R997	RS3AD0103NA-R	RES CHIP,10K 1/16W +/-5% ,0603
R287	RS3AD0103NA-R	RES CHIP,10K 1/16W +/-5% ,0603 USA ONLY
R288	RS3AD0103NA-R	RES CHIP,10K 1/16W +/-5% ,0603 EUROPE ONLY
R115 R116 R237 R253 R259 R260 R261 R312 R313 R333 R595 R656 R979	RS3AD0104NA-R	RES CHIP,100K 1/16W +/-5% ,0603
R321	RS3AD010ANA-R	RES CHIP,1R 1/16W +/-5%,0603
R195 R196 R988	RS3AD0121NA-R	RMGCFMIC 120R0 OHM +5% 0603
R389	RS3AD0151NA-R	RMGCFMIC 150R0 OHM +5% 0603
R736 R738 R741	RS3AD0152NA-R	RMGCFMIC 1K5 OHM +5% 0603
R727 R739 R164	RS3AD0153NA-R	RES CHIP,15K 1/16W,+/-5%,0603.
R913 R914 R916 R917 R918	RS3AD0182NA-R	RES CHIP,1.8K,1/16W,+-5%,0603.
R185	RS3AD022ANA-R	RMGCFMIC 2R2 OHM +5% 0603
R711	RS3AD0241NA-R	RES CHIP 240 OHM 1/16W +/-5% 0603
R447 R448 R449 R450 R451 R452 R453 R454 R479 R480 R481 R482 R483 R484 R485 R486	RS3AD0331NA-R	RMGCFMIC 330R0 OHM +5% 0603
R161 R162	RS3AD0332NA-R	RMGCFMIC 3K3 OHM +5% 0603
R231 R518	RS3AD033ANA-R	RMGCFMIC 3R3 OHM +5% 0603
R246 R249 R250	RS3AD0390NA-R	RES,CHIP 39 OHM 1/16W +/-5% 0603
R384 R686 R688 R689	RS3AD0330NA-R	RMGCFMIC 33R0 OHM +5% 0603
R853 R915	RS3AD0392NA-R	RMGCFMIC 3K9 OHM +5% 0603
R117 R118 R126 R127 R131 R132 R139 R140 R153 R154 R167 R168 R175 R176 R203 R204 R227 R228 R592 R593	RS3AD0432NA-R	RMGCFMIC 4K3 OHM +5% 0603
R318 R669	RS3AD0470NA-R	RMGCFMIC 47R0 OHM +5% 0603
R652 R852 R854	RS3AD0471NA-R	RMGCFMIC 470R0 OHM +5% 0603
R121 R128 R129 R136 R157 R165 R172 R223 R230 R232 R233 R280 R282 R283 R439 R557 R589 R851	RS3AD0472NA-R	RES CHIP,4K7 1/16W +/-5%,0603
R300	RS3AD0473NA-R	RES CHIP,47K 1/16W +/-5%,0603
R510	RS3AD0474NA-R	RMGCFMIC 470K0 OHM +5% 0603
R275 R989	RS3AD047ANA-R	RES CHIP,4R7 1/16W +/-5%,0603.
R634 R683 R684 R276	RS3AD0750NA-R	RMGCFMIC 75R0 OHM +5% 0603
R574 R981	RS1AD0750NA-R	RES CHIP 75OHM 1% 1/16W 0603
R100 R499	RC3DI0331IN-R	RCF 330R0 OHM +5% 250MI0W
Miscellaneous		
L412 L416 L418 L424 L425 L436 L503 L533	H03-FB3012012CF-R	FCM2012CF-301T04 0805
E901	H03-FYACF333TNN-R	FILTER ACF451832-333-T
L222 L404 L408 L409 L410 L411 L417 L419 L422 L433 L435 L502 L686 L903 L904 L905 L906	H03-FB3012012CF-R	FCM2012CF-301T04 0805

Ref. Designator	Part Number	Description
DSP PCB ASS'Y		
Y112	H03-OSXNL4515B0-R	CRYSTAL 45.1584MHz 22p SO22320D5-45.1584-T&R USA ONLY
N111	H03-SOUSB45810B-R	JACK R41-5810B (Mitsumi) XM/DT connector USA ONLY
N101	H03-SOUSB5005K0-R	AU6-EC-005K0
L414 L415	RS3AD0270NA-R	RES,CHIP 27 OHM 1/16W +/-5% 0603
L413 R421	RS3AD0751NA-R	RES.CHIP,750OHM,1/16W,+-5%,0603.
L401 L403 L405 L902	H03-FB05B3580NN-R	BEAD AXIAL/TAP,HC3580 80.5ohm
L431 L432 L434 L702	H03-LAINB0470CR-R	LF 47U0H +10% 5.8 OHM 500MI0A
L421 L426 L428 L429 L430 L501	H03-LAINB047ACR-R	LF 4U7H +10% 1.7 OHM 190.0A
P091	H03-ICLM19CIZIE-R	IC TEMPERATURE SENSOR LM19CIZ 2.4V TO-92
Y105	H03-OSCEM05M0RU-R	CERAMIC RESONATOR CSTLS_G 5.0MHz
Y413	H03-OSCEM24M5RU-R	VCXO 24M576 HZ +50 PPM -50 PPM 0 OHM 3.3V
Y111	H03-OSX06M0HZ00-R	CRYSTAL 6MHz 2P WOOIN HC-49/S_22PF
K700	H03-RLL0516632B-R	RELAY PWR 5.0V 166.0OHM 1.0A 24.0V
N802	H03-SORA40RSAGN-R	JACK RCA 4P JB040131ZG GN BN PP TA ,GOLD COLOR
N801	H03-SORA40RSCGN-R	JACK RCA 4P JB040131QG WH BU RD GY,GOLD COLOR
J411 J413 J414	H03-SORX22073GN-R	JACK RCA+ OPTICAL RX YKC22-0733N,GOLD COLOR
J402	H03-SOTX22073GN-R	JACK RCA+ OPTICAL TX YKC22-0732N,GOLD COLOR
N931	H03-WE03B012000-R	WIRE ASS`Y UL1007#26 120MM 2.0MM 3P WHT
N119	H03-WN03SB00000-R	CONNECT 2.0mm 3P GIL-S-3P-S2T2-EF
P711 P712	H03-WN03SE00000-R	CON 3.96MM PITCH MOLEX 35313-0310
N707	H03-WN04AB100WH-R	CONN WAFER 2.0MM 4P 35237-0410 WHT
P704	H03-WN05SB00000-R	CONNECT 2.0mm 5P GIL-S-5P-S2T2-EF
N716	H03-WN07AB100WH-R	CONN WAFER 2.0MM 7P 35237-0710 WHT
P715	H03-WN07SB100WH-R	CONN WAFER 2.0MM 7P 35336-0710 WHT
N714	H03-WN09AB100WH-R	CONNECT WAFER 2.0mm 9P 35237-0910 WHT
P703	H03-WN09SB00000-R	CONNECT 2.0mm 9P GIL-S-9P-S2T2-EF
P713	H03-WN09SB100WH-R	CONNECT WAFER 2.0mm 9P 35336-0910 WHT
N706	H03-WN15AB100WH-R	CONNECT WAFER 2.0mm 15P 35237-1510 WHT
N705	H03-WN16AB100WH-R	CONNECT WAFER 2.0mm 16P 35237-1610 WHT
P714	H03-WN16DI00000-R	GF120-16S-TS 1.25mm 16P
N702 N710	H03-WN19AB00000-R	CONN 2.0MM 19 MA R NAT SOCKET MOLEX 35237-1910 0 0
P701	H03-WN22DI00000-R	GF120-22S-TS 1.25mm 22P
P708	H03-WN29DI00000-R	CONNECT 1.25MM 29PIN GF120-29S-TS
BK10	H03-ZMD27S09A00-R	BRACKET BKT XM
FRONT PCB ASS'Y		
Capacitors		
C127	CEHFC0107NN-R	CE 100U0F +20% 16.0V 85C
C119 C128 C551	CCZID0104NA-R	CC 100N0F +80% -20% 50.0V F
C517	H03-CEHEC02275E-R	CE 220UF +20% 10.0V D6.3XL11 P5MM 85C SK 220/10V 5 X11
C718	H03-CEHFC04765E-R	CE47UF +20% 16.0V D5XL11 P5MM 85C SK 47/16V 5 X11
C501 C502 C708	H03-CEHFC04762S-R	CE 47UF +20% 16V D5XL7 P2.5MM 2000hours 85C
C503 C504	H03-CEHFC01062S-R	CE 10UF +20% 16V D4XL7 P2.5MM 2000hours 85C
C125 C126	H03-CFHKA0473NN-R	CAP POLYESTER METAL 47NF 100V 20% CPM
C701 C704 C706	CZDII0100CE-R	CAP CERAMIC/CHIP 10PF 50V CH D N 0805
C120 C121 C122 C400 C401 C403 C404 C717 C725 C726 C727 C900	CZJII0101BE-R	CAP CHIP 100P0F +5% -5% 50.0V NP0 0603
C702	CZJII0101CE-R	CAP CERAMIC/CHIP 100PF 50V CH J NPO 0805
C703 C705	CZJII0122CC-R	CAPCHIP 1n2F 50V SL J X7R 0805 +/-5%
C300 C301	CZJII0821CE-R	CAP CHIP 820pF 50V SL J NP0 0805
C506	CZKII0221BA-R	CAP CHIP 220PF 50V K SL 0603
C252 C253	CZKII0222BC-R	CAP CHIP 2N2F +10% -10% 50.0V X7R 0603
C201 C211	CZKII0223BC-R	CAP CHIP 22N0F +10% -10% 50.0V X7R 0603
C1 C2 C124 C251 C254 C405 C406 C407 C411 C521 C552 C553 C709 C723	CZZFI0104BF-R	CAP CHIP 100N0F +80% -20% 16.0V Y5V 0603
Semiconductors		
Q821	H03-TRMPSA06NNA-R	TR-SLPLF MPSA06 N 500MI0A TO-92 NPN
Q823	H03-TRMPSA56YNA-R	TR-SLPLF MPSA56 Y PNP -500MI0A -300V
D301	H03-DG1N04148NB-R	D-SLP 1N4148 100.0V 150E-3A

Ref. Designator	Part Number	Description
FRONT PCB ASS'Y		
D716	H03-DR1N04004NA-R	D-SR 1N4004 400.0V 1.0A
D853 D854 D855 D856	H03-DL30B2015AA-R	D-LEM 30B3-20-15 GaN SUPER BLUE WATER CLEAR 15 ML37B23H-CED
D831	H03-DL3BA05V0BA-R	D-LEM BLUE/AMBER 3PIE RD RND L-3VYMBC
D800 D801	H03-DLRED3FRDBA-R	D-LEM RED/GREEN 3F RD RND CL
D251 D252 D411 D412 D701 D715 D721 D722	H03-DS1S50094NB-R	D-SLP 1SS355 35.0V 225MI0A
D110	H03-DSUDZ05V1NB-R	DIODE ZENER UDZ5.1B 5.1V 200MI0W
IC50	H03-ICLM02068D2-R	IC-OPERAMP NJM2068M-TE1 DUAL SOP8
Q703	H03-TRKTA1504ND-R	TRANSISTOR PNP KTA1504Y(S)SOT-23
Q701 Q702	H03-TRKTC3875ND-R	TRANSISTOR NPN KTC3875S SOT23
Q824 Q831 Q832	H03-TSKRA107SNI-R	KRA107S SOT-23 PNP
Q800 Q801 Q802 Q803 Q820 Q822 Q833	H03-TSKRC107SND-R	KRA107S SOT-23 PNP
Resistors		
R505 R841 R842 R843 R844 C724	RS3AD0000NA-R	RES CHIP, 0 R 1/16W +/-5%, 0603
R521 R522 R722 R746	RS3AD0101NA-R	RES CHIP,100R 1/16W +/-5%,0603
R201 R211 R503 R515 R721 R824	RS3AD0102NA-R	RES CHIP,1K 1/16W +/-5% ,0603
R702 R704 R709 R822	RS3AD0103NA-R	RES CHIP,10K 1/16W +/-5% ,0603
R516	RS3AD0104NA-R	RES CHIP,100K 1/16W +/-5% ,0603
R706 R707	RS3AD0105NA-R	RES CHIP 1M 1/16W +5% 0603
R202 R212	RS3AD0122NA-R	RMGCFMIC 1K2 OHM +5% 0603
R203 R213	RS3AD0152NA-R	RMGCFMIC 1K5 OHM +5% 0603
R209 R219	RS3AD0183NA-R	RMGCFMIC 18K0 OHM +5% 0603
R823	RS3AD0221NA-R	RMGCFMIC 220R0 OHM +5% 0603
R204 R214 R510 R519	RS3AD0222NA-R	RMGCFMIC 2K2 OHM +5% 0603
R205 R215 R703	RS3AD0272NA-R	RMGCFMIC 2K7 OHM +5% 0603
R206 R216 R506	RS3AD0332NA-R	RMGCFMIC 3K3 OHM +5% 0603
R509	RS3AD0472NA-R	RES CHIP,4K7 1/16W +/-5%,0603
R520	RS3AD0473NA-R	RES CHIP,47K 1/16W +/-5%,0603
R207 R217	RS3AD0562NA-R	RMGCFMIC 5K6 OHM +5% 0603
R821	RS3AD0563NA-R	RES CHIP, 56K 1/16W +/-5%, 0603.
R301 R302 R701	RS3AD0683NA-R	RMGCFMIC 68K0 OHM +5% 0603
R208 R218	RS3AD0822NA-R	RMGCFMIC 8K2 OHM +5% 0603
R508	RS3AD0911NA-R	RMGCFMIC 910 OHM +5% 0603
R705	RS3BB0564NA-R	RES,CHIP,560K OHM,1/10W +/-5%,0805
R461 R462	RS3AD0753NA-R	RES CHIP 75K 1/16W +-5% 0603.
R119 R118	RC3DI0100IN-R	RCF 10R0 OHM +5% 250MI0W
R122 R123 R501 R502	RC3DI0101IN-R	RCF 100R0 OHM +5% 250MI0W
R831	RC3DI0151IN-R	RCF 150 OHM 5% 1/4W
R518	RC3DI0182IN-R	RCF 1K8 OHM 5% 1/4W
R801R803	RC3DI0201IN-R	RCF 200R0 OHM +5% 250MI0W
R251 R252	RC3DI022AIN-R	RCF 2R2 OHM +5% 250MI0W
R800 R802	RC3DI0271IN-R	RCF 270R0 OHM +5% 250MI0W
R832	RC3DI0331IN-R	RCF 330R0 OHM +5% 250MI0W
R120 R121	RC3DI0471IN-R	RCF 470R0 OHM +5% 250MI0W
R751	RC3DI0473IN-R	RCF 47K OHM +5% 250MI0W
R851 R852	RC3DI0561IN-R	RCF 560R0 OHM +5% 250MI0W
VR10	H03-SWE3A0505S1-R	SWIROT EC16B24204A9 5V 500U0A 10T 3P 0 0 ENCODER
Miscellaneous		
L700	H03-FB2522012HF-R	COIL FCM2012HF-252T02 2500ohm SURFACE MT 2012
	ZFNR1SENSOR-R	RUBBER SENSOR
RM71	H03-ICROMN338EC-R	REMOCON RECEIVER MODULE ROM-N338TEC
N207	H03-WE11B041000-R	WIRE ASS`Y UL1007#26 410MM 2.0MM 11P WHT
N201	H03-WG03AB80900-R	WIRECONASY DL 2.0MM 03P 90MM ANG-DOWN UL1007 RIBBON 26 1 B20
N206	H03-WG05SB83500-R	WIRE ASS'Y UL1007#26(TA) 350mm 2.0mm 5p GRY
N203	H03-WG13SB82000-R	UL1007#26 STR 200mm 2.0mm 13P WHT
P213	H03-WN04SB00000-R	CONNECT 2.0mm 4P GIL-S-4P-S2T2-EF
P215	H03-WN06SB01000-R	CNT PLUG BD`BD PLUG 2.0mm 35336-0610
P209	H03-WN07AB00000-R	CONNECT 2.0MM 7P GIL-S-07P-S2L2-EF

Ref. Designator	Part Number	Description
FRONT PCB ASS'Y		
N214	H03-WN19AB00000-R	CONN 2.0MM 19 MA R NAT SOCKET MOLEX 35237-1910 0 0
P216	H03-WN19SB00000-R	CONN 2.0MM 19 MA ST NAT MOLEX 35336-1910 0 0
N205	H03-WN22AI00000-R	GF120-22S-LS 1.25mm 22P
N204	H03-WS4261005FN-R	WIRE ASS'Y UL2547/1007#26 100MM 4P 2.0MM WHT
N202	H03-WS4265913FN-R	CNT ASSY 2.0MM 4P 590MM SHIELD 26AWG UL2547 1/3
N210	H03-WS5264823FN-R	UL1533/2547#26 STR 480mm 2.0mm 5P WHT
N212	H03-WS5248505CW-R	WIRE ASS'Y UL1007/1533#24(TA)850mm 2.0mm 5P WHT
N208	H03-WS6265105EN-R	WIRECONASY DL 2.0MM 6P 510MM UL1533 SHIELD 26 1
N211	H03-WS7260805EN-R	WIRE ASS'Y UL1533/1007#26 80MM 2.0MM 7P WHT SHILED
FL1	H03-XD18BT19GNA-R	18-BT-19GINK
S1 S2 S3 S4 S5 S6 S7 S8 S9	H03-ZMB01S02200-R	SPRING PLATE GND C5212 0.2T
J41	H03-ZMC12S17A00-R	AC PUN SHIELD DIGITAL ET
J42	H03-ZMD12S01A00-R	SHIELD IR
J43	H03-ZMD12S01B00-R	SHIELD MICROPHONE
S201~S220	H03-SWC2A112FS1-R	SWI TACT VERTICAL SKQNADD010
L251	H03-LAINB0470CR-R	LF 47U0H +10% 5.8 OHM 500MI0A
L120	H03-LAINB047ACR-R	LF 4U7H +10% 1.7 OHM 190.0A
RM72	H03-DPLP200LNNN-R	PIN PHOTO DIODE LP-200TL
NJ71	H03-SO3P5179NNN-R	JACK PHONE 3.5PI PJ0435179N
NJ70	H03-SORA1JE01NN-R	JACK RCA 1P JE010003MN GND OR
NJ11	H03-SORA3313PNN-R	CON PHONO SCKT RCA-313P 3 PINS
NJ12	H03-SORA8OSC5N8-R	JACK S-VIDEO 1P C40160261N
NJ10	H03-SOSS9CKX3NN-R	JACK PHONE 6.35 H70980110S 9P BK
NJ79	H03-SOTORX177LT-R	FIBER OPTIC RECEIVING TORX177L (F, T)
MAIN PCB ASS'Y		
Capacitors		
C101 C102 C103 C104 C107 C108 C109 C110 C111 C112 C113 C114 C115 C116 C117 C118 C205	CCKID0101NA-R	CC 100P0F +10% -10% 50.0V Y5P
C307 C308 C313 C314 C403 C404 C569 C570	CCKID0271NN-R	CC 270P0F +10% -10% 50.0V 2B4
C433	CCMFD0103NN-R	CC 10N0F +20% -20% 16.0V Y5S
C119 C120 C203 C212 C214 C527 C531 C709 C711 C712 C713	CCZID0104NA-R	CC 100N0F +80% -20% 50.0V F
C315 C316 C409 C410	CCCIC0030NN-R	CAP CERAMIC 3PF 50V C CH TAP
C317 C318 C411 C412	CCKIC0181NA-R	CC 180P0F +10% -10% 50.0V Y5P
C329 C330 C425 C426	CCKIC0222NA-R	CC 2N2F +10% -10% 50.0V Y5P
C707	CCZGC0104NA-R	CAP CERAMIC 100NF 25V Z Z5U TAP
C331 C332 C407 C408	H03-CEHEC02275E-R	CE 220UF +20% 10.0V D6.3XL11 P5MM 85C SK 220/10V 5 X11
C206 C208 C213 C309 C310 C405 C406 C526 C710	H03-CEHGC01075E-R	CE 100U0F +20% 25.0V 6.3X11 85C P5MM SK 100/25V 6.3 X11
C210	H03-CEHIC01055E-R	CE 1UF +20% 50V D5XL11 P5MM 85C SK 1/50V 5 X11
C301 C302 C401 C402 C518 C519 C521 C530 C708 C429	H03-CEHIC01065E-R	CE 10U0F +20% 50.0V 85C P5MM 5X11 SK 10/50V 5 X11
C207	H03-CEHIC04755E-R	CE 4U7F +20% 50.0V 85C P5MM SK 4.7/50V 5 X11
C303 C304 C305 C306 C421 C422 C423 C424	H03-CEHJA0477MN-R	CE 470U0F +20% 63.0V 85C SK 470/63V 13 X21
C706	CEMFA0478BK-R	CAP ELEC 4700UF 16V M 16X25 85C 120HZ ELITE
C432	H03-CEMGC04775E-R	CE 470U0F +/-20% 25.0V 10X13 85C SK 470/25V 10 X13
C323 C324 C430 C431	CFLJC0683NN-R	CPM 68N0F +5% 63.0V
C506 C507 C508 C516 C528 C529 C701 C702 C703	CPIKC0473NN-R	CPF 47N0F +10% 100.0V
C211 C319 C320 C321 C322 C413 C414 C415 C416	H03-CEMKC0106AH-R	CAP ELEC 10UF 100V M 6.3X11 SHL
C325 C326 C327 C328 C417 C418 C419 C420	H03-CPJJC0104NN-R	CAP POLYESTER NON METAL 0.1uF 63V J TAP PCMT365 76104
C571 C572	H03-CEMJA0159KA-R	CAP ELEC 15000uF 63V M 35x50 LSW153M1JQ50M
C573	H03-CEMDC0478KA-R	CAP ELECTROYTIC 4700UF 6.3V M 12.5X21 (SKP472M0JI21R)I
C333 C335 C336 C434	CCKIC0103NA-R	CC 10N0F +10% -10% 50.0V Y5P
C509 C510	H03-CEHHC0228MN-R	CE 2200UF +20% 35.0V 85C 16X25

Ref. Designator	Part Number	Description
MAIN PCB ASS'Y		
C517	H03-CEHIA0228MN-R	CE 2200UF +20% 50.0V 85C 16X35
C705	H03-CEMFA0688BK-R	CAP ELEC 6800UF 16V M 16X25 85C 120HZ SK 6800/16V 16 X25
C105 C106	CZZFI0104BF-R	CAP CHIP 100N0F +80% -20% 16.0V Y5V 0603
Semiconductors		
D205 D206 D301 D302 D303 D304 D305 D306 D307 D308 D401 D402 D403 D404 D405 D406 D407 D408 D409 D410 D411 D412 D603	H03-DG1N04148NB-R	D-SLP 1N4148 100.0V 150E-3A
D101 D102 D103 D104 D508 D509 D703	H03-DR1N04004NA-R	D-SR 1N4004 400.0V 1.0A
D204	H03-DZGE12V10MA-R	MZ0.5GE12V-10 12V 10mA
D207	H03-DZGE3V320MA-R	DIODE ZENER MZ0.5GE3V3-20 3.3V 20mA
Q309 Q310 Q411 Q412	H03-TR2SA1145YF-R	TRANSISTOR PNP 2SA1145-Y(F) TO-92 HFE:120~240
Q443	H03-TRKRC107MNA-R	TR-SLPSWA KRC107M NPN
Q315 Q316 Q319 Q320 Q417 Q418 Q421 Q422 Q442	H03-TRKTA1024NA-R	TR-SLPLF KTA1024 Y PNP 50MI0A -150V
Q311 Q312 Q410 Q413 Q414	H03-TRKTA1268NA-R	TR-SHPLF KTA1268BL PNP 100MI0A 120V
Q307 Q308 Q407 Q408 Q426 Q441	H03-TRKTC3198NA-R	TR-SLPLF KTC3198BL NPN 150MI0A
Q301 Q302 Q303 Q304 Q305 Q306 Q313 Q314 Q337 Q338 Q401 Q402 Q403 Q404 Q405 Q406 Q409 Q415 Q416 Q425	H03-TRKTC3200NA-R	TR-SHPLF KTC3200BL NPN 100MI0A 120V
Q317 Q318 Q321 Q322 Q419 Q420 Q423 Q424	H03-TRKTC3206NA-R	TR-SLPLF KTC3206 Y NPN 50MI0A 150V
Q601	H03-TRKTD1302NA-R	TR-SLPLF KTD1302 B NPN 300MI0A 20V
D502 D505	H03-DU2W04MMF00-R	DIODE 2W04M-MF RC-2 Kink Type
D701	H03-DUKBU6GMF6N-R	KBU6G-MF RS-6 Kink Type
IC73	H03-ICKIA278R06-R	4 TERMINAL 2A OUTPUT LOW DROP VOLTAGE REGULATOR KIA278R06PI TO-220IS-4 +6V
IC71	H03-ICKIA278R33-R	4 TERMINAL 2A OUTPUT LOW DROP VOLTAGE REGULATOR KIA278R33PI TO-220IS-4 +3.3V
IC72	H03-ICKIA7805I2-R	IC-REGPOSFXD KIA7805API NORMAL TO-220IS +5V
IC59	H03-ICKIA7812I2-R	IC-REGPOSFXD KIA7812API NORMAL +12V
IC54	H03-ICKIA7824I2-R	IC-REGPOSFXD KIA7824API TO-220IS NORMAL +24V
IC51 IC60	H03-ICLM07815BD-R	IC-REGPOSFXD KIA7815API NORMAL +15V
IC52	H03-ICLM07915BD-R	IC-REGNEGFXD KIA7915API NORMAL TO-220AB -15V
Q329 Q330 Q433 Q434	H03-TR2SA1859BC-R	TR-SHPLF 2SA1859A PNP -2.0A
Q335 Q336 Q439 Q440	H03-TR2SA1986AC-R	TRANSISTOR PNP 2SA1986-R(AC,F) HFE:55~110 ADD MICA SHEET SIZ
Q331 Q332 Q435 Q436	H03-TR2SC4883BC-R	TR-SHPLF 2SC4883A NPN 2.0A
Q333 Q334 Q437 Q438	H03-TR2SC5358AC-R	TRANSISTOR NPN 2SC5358-R(AC,F) HFE:55~110 ADD MICA SHEET SIZ
Q327 Q328 Q431 Q432	H03-TRKTA1360BE-R	TRANSISTOR PNP KTA1360 TO-126
Q701 Q702 Q703 Q704	H03-TRKTC3114NE-R	TRANSISTOR NPN KTC3114 TO-126
Q323 Q324 Q429 Q430	H03-TRKTC3423BE-R	TRANSISTOR NPN KTC3423 TO-126
D210	H03-DS05GBUSCNB-R	DIODE PG05GBUSC
IC22	H03-ICLM02068D2-R	IC-OPERAMP NJM2068M-TE1 DUAL SOP8
Resistors		
R351 R352 R367 R368 R445 R446 R447 R448	H03-RM3EG0100LN-R	RMF 10R0 OHM +5% 500MI0W
R303 R304 R388 R389 R473 R474 R477 R478	RC3DI0100IN-R	RCF 10R0 OHM +5% 250MI0W
R213 R221 R353 R354 R369 R370 R457 R458 R459 R460 R717	RC3DI0101IN-R	RCF 100R0 OHM +5% 250MI0W
R211 R508 R601	RC3DI0102IN-R	RCF 1K0 OHM +5% 250MI0W
R485 R706 R714	RC3DI0103IN-R	RCF 10K0 OHM +5% 250MI0W
R207 R214 R216 R217 R218 R219 R220 R309 R310 R479 R480 R602	RC3DI0104IN-R	RCF 100K0 OHM +5% 250MI0W
R363 R364 R365 R366 R461 R462 R463 R464	RC3DI0150IN-R	RCF 15R0 OHM +5% 250MI0W

Ref. Designator	Part Number	Description
MAIN PCB ASS'Y		
R380 R381 R386 R387 R481 R483 R488 R490	RC3DI0152IN-R	RCF 1K5 OHM +5% 250MI0W
R341 R342 R343 R344 R384 R385 R437 R438 R439 R440 R482 R489	RC3DI0153IN-R	RCF 15K0 OHM +5% 250MI0W
R311 R312 R313 R314 R405 R406 R407 R408	RC3DI0162IN-R	RCF 1K6 OHM +5% 250MI0W
R339 R340 R345 R346 R347 R348 R349 R350 R433 R434 R435 R436 R441 R442 R443 R444	RC3DI0201IN-R	RCF 200R0 OHM +5% 250MI0W
R215 R317 R318 R319 R320 R321 R322 R409 R410 R411 R412 R413 R414	RC3DI0221IN-R	RCF 220R0 OHM +5% 250MI0W
R390 R391 R486 R492	RC3DI0223IN-R	RCF 22K0 OHM +5% 250MI0W
R103 R104 R371 R372 R373 R374 R465 R466 R467 R468 R616	RC3DI022AIN-R	RCF 2R2 OHM +5% 250MI0W
R497	RC3DI0271IN-R	RCF 270R0 OHM +5% 250MI0W
R209 R498 R506	RC3DI0273IN-R	RCF 27K0 OHM +5% 250MI0W
R224	RC3DI0274IN-R	RCF 270K0 OHM +5% 250MI0W
R701 R707 R710 R711	RC3DI0282IN-R	RCF 2K8 OHM +5% 250MI0W
R301 R302 R401 R402	RC3DI0331IN-R	RCF 330R0 OHM +5% 250MI0W
R225 R305 R306 R403 R404 R509 R515	RC3DI0333IN-R	RCF 33K0 OHM +5% 250MI0W
R107 R108	RC3DI033AIN-R	RCF 3R3 OHM +5% 250MI0W
R382 R383 R484 R487 R491	RC3DI0393IN-R	RCF 39K0 OHM +5% 250MI0W
R307 R308 R415 R416	RC3DI0433IN-R	RCF 43K0 OHM +5% 250MI0W
R101 R102 R105 R106 R109 R110 R113 R114 R315 R316 R593 R594 R718	RC3DI0471IN-R	RCF 470R0 OHM +5% 250MI0W
R223	RC3DI0513IN-R	RCF 51K0 OHM +5% 250MI0W
R323 R324 R325 R326 R329 R330 R333 R334 R335 R336 R337 R338 R421 R422 R423 R424 R425 R426 R427 R428 R429 R430 R431 R432	RC3DI0561IN-R	RCF 560R0 OHM +5% 250MI0W
R375 R376 R469 R470	RC3DI0820IN-R	RCF 82R0 OHM +5% 250MI0W
R493	RC3DI0822IN-R	RCF 8K2 OHM +5% 250MI0W
R331 R332 R419 R420	RM1DI0142IN-R	RMF 1K4 OHM +1% 250MI0W
R327 R328 R417 R418	RM1DI0333IN-R	RMF 33K0 OHM +1% 250MI0W
R702 R705 R708 R709	RC3DI0751IN-R	RCF 750R0 OHM +5% 250MI0W
R378 R379 R471 R472	H03-RI3IC022BEN-R	RW 220MI0 OHM +5% 5.0W 100PPM/`C -100PPM/`C
R392 R393 R475 R476	H03-RM3FC0100BN-R	RES METAL OXIDE 10R OHM+5% 1.0W
R514 R517 R518	H03-RM3GC022ACN-R	RESISTOR METAL OXIDE 2R2 OHM +5% 2.0W
R504 R507 R510 R703 R704 R715 R716	H03-RM3GC033ACN-R	RESISTOR METAL OXIDE 3R3 OHM +5% 2.0W
R505	H03-RM3GC047ACN-R	RESISTOR METAL OXIDE 4R7 +5% 2.0W
VR74	H03-RT7EA0201NB-R	PR 200R0 OHM +20% 500MI0W
VR71 VR72 VR73	RT6BA0201NB-R	PR 200R0 OHM +30% 100MI0W
Miscellaneous		
G102 G103	H03-ZNMSA4004SN-R	TERMLUG GND
F501 F502 F505 F506	H03-FURN22000SR-R	FUSE SR-5 SERIES 3821200 SR-5- 2A 250V 35A
F701 F702	H03-FURN23150SR-R	FUSE SR-5 SERIES 3821315 SR-5- 3.15A 250V 35A
P071	H03-ICLM19CIZIE-R	IC TEMPERATURE SENSOR LM19CIZ 2.4V TO-92
L301 L302 L401 L402	H03-LCNNNA050NA-R	LFA 1MM 10MM 5 LEFT 0.0MM NONE SP-2516
NJ81	H03-SOPA81M367G-R	SH081M367G GY BU RD WH
NJ83	H03-SORA40RSAGN-R	JACK RCA 4P JB040131ZG GN BN PP TA ,GOLD COLOR
NJ82	H03-SORA40RSCGN-R	JACK RCA 4P JB040131QG WH BU RD GY,GOLD COLOR
N814	H03-WG03SE03700-R	WIRE ASS'Y UL1007#16(TA) 370mm 3P GRY
N807	H03-WG05SB83000-R	WIRE ASS'Y UL1007#26(TA) 300mm 2.0mm 5P WHT
P503 P805 P806 P809 P817 P818	H03-WN02SD00000-R	CONN 2.5MM 2 MA ST NAT 5267-02A 0 0

Ref. Designator	Part Number	Description
MAIN PCB ASS'Y		
N819 N820 N821 N823	H03-WN04AB100WH-R	CONN WAFER 2.0MM 4P 35237-0410 WHT
P801 P802 P803 P804	H03-WN04SB100WH-R	CONN WAFER 2.0MM 4P 35336-0410 WHT
P808	H03-WN05SD100WH-R	CONN WAFER 2.5MM 5P 5267-05A WHT
P815	H03-WN07SB100WH-R	CONN WAFER 2.0MM 7P 35336-0710 WHT
N822	H03-WN09AB100WH-R	CONNECT WAFER 2.0mm 9P 35237-0910 WHT
P811	H03-WN09SB100WH-R	CONNECT WAFER 2.0mm 9P 35336-0910 WHT
P816	H03-WN10SB100WH-R	CONNECT WAFER 2.0mm 10P 35336-1010 WHT
P812	H03-WN13SB00000-R	CONN 2.0MM 13P GIL-S-13P-S2T2
P813	H03-WN19SB00000-R	CONN 2.0MM 19 MA ST NAT MOLEX 35336-1910 0 0
	H03-ZMD27HS0400-R	H/SINK REG. TR AVR745
NJ84	SO0A18P8CNN-R	JACK-TELE SNAP-IN GOLDEN TELECOM GDL1-8P8C 8T BK 0 0
	ZNSSM3023HZ-R	NUT M3 ZN PLATED
	ZSMBM3014BZ-R	SCREW M.S M3X14 ZN PLATED
	ZSTBM3010BB-R	SCREW ST BH 3X10
	H03-ZH740MSQ6WH-R	MICA SHEET SIZE 19X22X0.05
PROCESSOR PCB		
Capacitors		
C125 C126 C127 C128 C141 C143 C144 C146 C190 C191 C206 C207 C212 C213 C220 C221 C226 C227 C230 C231 C232 C233 C251 C252 C253 C254 C301 C302 C303 C304 C307 C308 C309 C310 C508 C510 C517 C518 C521 C522 C528 C529 C534 C535 C601 C602 C611 C612 C617 C618 C621 C622 C627 C628 C631 C632 C637 C638 C641 C642 C647 C648 C752 C756	H03-CEHFC0106NN-R	CE 10U0F +20% 16.0V 85C 5X11 P5MM SK 10/16V 5 X11
C175 C176 C193	H03-CEHIC01055E-R	CE 1UF +20% 50V D5XL11 P5MM 85C SK 1/50V 5 X11
C607 C608	CEHGC0337NN-R	CE 330UI0F +20% 25V 85C
C214 C215 C609 C610	H03-CEHFC01075E-R	CE 100UF +-20% 16.0V D5XL11 P5MM 85C SK 100/16V 5 X11
C101 C102 C103 C104 C116 C117 C118 C119 C121 C122 C123 C124 C131 C132 C133 C134 C136 C137 C138 C139 C147 C148 C149 C150 C152 C153 C154 C155 C156 C157 C158 C159 C194 C195 C196 C197 C201 C202 C204 C205 C210 C211 C531 C603 C604 C757 C758	CZJII0101BE-R	CAP CHIP 100P0F +5% -5% 50.0V NP0 0603
C281 C282	CZJII0121BE-R	CAP CHIP 120PF 50V J NPO 0603
C208 C209 C222 C223 C624 C644	CZJII0151BE-R	CAP CHIP 150PF 50V J NPO 0603
C532 C533	CZJII0330BE-R	CAP CHIP 33P0F +5% -5% 50.0V NP0 0603
C751	CZKII0222BC-R	CAP CHIP 2N2F +10% -10% 50.0V X7R 0603
C12 C13 C14 C15 C16 C17 C18 C19 C120 C135 C203	CZZFI0104BF-R	CAP CHIP 100N0F +80% -20% 16.0V Y5V 0603
C224 C225 C238 C315 C316 C503 C506 C519 C520 C530 C540	CZJII0101BE-R	CAP CHIP 100P0F +5% -5% 50.0V NP0 0603
C591 C592 C613 C614 C623 C633 C643	CZJII0151BE-R	CAP CHIP 150PF 50V J NPO 0603
C605 C606	CZJII0271BE-R	CAP CHIP, 270PF 50V +/-5% CH J 0603
C615 C616	CZJII0330BE-R	CAP CHIP 33P0F +5% -5% 50.0V NP0 0603
C634 C636 C753	CZKII0222BC-R	CAP CHIP 2N2F +10% -10% 50.0V X7R 0603
C10 C11 C20 C21	CZZFI0104BF-R	CAP CHIP 100N0F +80% -20% 16.0V Y5V 0603
C625 C626 C635 C645 C646	CZJII0560BE-R	CAP CHIP 56PF 50V CH J NPO 0603

Ref. Designator	Part Number	Description
PROCESSOR PCB		
Semiconductors		
IC13 IC14 IC18 IC19 IC21 IC22 IC23 IC24 IC26	H03-ICLM02068D2-R	IC-OPERAMP NJM2068M-TE1 DUAL SOP8
IC15	H03-ICTC9162CDA-R	IC CMOS TC9162CFG SOP28 HIGH VOLTAGE ANALOG FUNCTION SWITCH
IC12	H03-ICTC9163CDA-R	IC CMOS TC9163CFG SOP28 HIGH VOLTAGE ANALOG FUNCTION SWITCH
IC9	H03-ICTC9273CFG-R	TC9273CFG-004 SOP28 ANALOG SWITCH ARRAY Ics
IC16 IC17	H03-ICTC9482BDA-R	IC CMOS TC9482BFG SOP28 SYSTEM ELECTRONIC VOLUME CONTROL
IC2 IC3 IC4 IC5 IC6 IC7 IC10 IC11 IC25	H03-ICLM02068D2-R	IC-OPERAMP NJM2068M-TE1 DUAL SOP8
IC1	H03-ICNJM4580D2-R	IC OP AMP NJM4580M-TE1 SOP8 DUAL
IC8	H03-ICTC9273CFG-R	TC9273CFG-004 SOP28 ANALOG SWITCH ARRAY Ics
D351 D601	H03-DZGE9V120MA-R	MZ0.5GE9V1-20 9.1V 20mA
IC20	H03-ICNJM4556B2-R	IC OP AMP NJM4556AD DIP8 DUAL
Q601 Q602 Q621 Q622 Q624 Q625 Q627 Q628 Q630 Q631	H03-TRKTD1304ND-R	TR-SLPSWA KTD1304 NPN 20V 300MI0A SOT-23
Q109 Q203 Q301 Q605 Q608 Q611 Q614 Q615 Q618 Q620 Q623 Q626 Q629 Q754	H03-TSKRA107SNI-R	KRA107S SOT-23 PNP
Q104 Q105 Q107 Q108 Q201 Q202 Q204 Q205 Q221 Q222 Q302 Q303 Q603 Q604 Q606 Q607 Q609 Q610 Q612 Q613 Q616 Q617 Q690 Q691 Q752 Q753	H03-TRKTD1304ND-R	TR-SLPSWA KTD1304 NPN 20V 300MI0A SOT-23
Q692 Q751	H03-TSKRA107SNI-R	KRA107S SOT-23 PNP
Resistors		
R137 R138 R157 R158 R221 R222 R237 R238 R239 R240 R245 R246 R307 R308 R315 R316 R324 R325 R501 R502 R507 R508 R513 R519 R539 R540 R556 R557 R558 R559 R635 R636 R651 R652 R669 R670 R685 R686 R757 R758 R901 R902 R903 R904	RS3AD0000NA-R	RES CHIP, 0 R 1/16W +/-5%, 0603
R101 R102 R121 R122 R127 R128 R141 R142 R147 R148 R161 R162 R165 R166 R169 R170 R203 R204 R211 R212 R322 R323 R329 R631 R632 R649 R650 R665 R666 R687 R688 R731 R748 R763 R771	RS3AD0102NA-R	RES CHIP,1K 1/16W +/-5% ,0603
R191 R192 R193 R512 R520 R550 R551	RS3AD0103NA-R	RES CHIP,10K 1/16W +/-5% ,0603
R103 R104 R123 R124 R129 R131 R132 R136 R143 R144 R151 R152 R153 R154 R163 R164 R167 R168 R171 R172 R183 R184 R185 R186 R189 R194 R195 R196 R197 R198 R199 R200 R207 R208 R213 R214 R227 R228 R241 R242 R303 R304 R305 R306 R311 R312 R313 R314 R388 R389 R518 R524 R537 R538 R548 R554 R555 R603 R604 R609 R610 R629 R630 R641 R647 R648 R657 R658 R663 R664 R677 R683 R684 R689 R690 R749 R750 R759 R762	RS3AD0104NA-R	RES CHIP,100K 1/16W +/-5% ,0603
R570 R571	RS3AD0122NA-R	RMGCFMIC 1K2 OHM +5% 0603
R791 R792	RS3AD0152NA-R	RMGCFMIC 1K5 OHM +5% 0603
R704 R710 R716 R722	RS3AD0183NA-R	RMGCFMIC 18K0 OHM +5% 0603

Ref. Designator	Part Number	Description
PROCESSOR PCB		
R553 R705 R706 R711 R717 R718	RS3AD0202NA-R	RMGCFMIC 2K0 OHM +5% 0603
R611 R612 R613 R614 R691	RS3AD0221NA-R	RMGCFMIC 220R0 OHM +5% 0603
R615 R616 R701 R702 R707 R708 R713 R714 R719 R720	RS3AD0222NA-R	RMGCFMIC 2K2 OHM +5% 0603
R712	RS3AD0242NA-R	RMGCFMIC 2K4 OHM +5% 0603
R231 R232	RS3AD0272NA-R	RMGCFMIC 2K7 OHM +5% 0603
R699 R700	RS3AD0362NA-R	RMGCFMIC 3K6 OHM +5% 0603
R572 R573	RS3AD0430NA-R	RES CHIP 43R0 OHM +5% 62MI5W 0603
R125 R126 R133 R134 R145 R146 R155 R156 R201 R202 R215 R216 R235 R236 R243 R244 R251 R252 R301 R302 R309 R310 R533 R534 R546 R547 R601 R602 R623 R624 R639 R640 R655 R656 R675 R676 R756 R768	RS3AD0470NA-R	RMGCFMIC 47R0 OHM +5% 0603
R159 R160 R187 R188 R219 R220 R318 R319 R621 R622 R637 R638 R653 R654 R671 R672 R673 R674 R695 R696 R723 R724 R725 R726 R727 R728 R765 R766 R767 R772 R773 R774 R775 R776 R777 R778 R779 R780 R781 R783 R784	RS3AD0473NA-R	RES CHIP,47K 1/16W +/-5%,0603
R703 R709 R715 R721	RS3AD0474NA-R	RMGCFMIC 470K0 OHM +5% 0603
R209 R210	RS3AD0512NA-R	RMGCFMIC 5K1 OHM +5% 0603
R281 R282 R291 R292 R293 R294 R295 R296 R297 R298 R299 R300	RS3AD0823NA-R	RES,CHIP 82K,1/16W,+/-5%,0603
R217 R218 R619 R620	RS3AD0100NA-R	RMGCFMIC 10R0 OHM +5% 0603
R793 R794	RS3AD0123NA-R	RES CHIP,12K 1/16W +/-5%,0603
R223 R224	RS3AD0820NA-R	RMGCFMIC 82R0 OHM +5% 0603
R229 R230	RS3AD0432NA-R	RMGCFMIC 4K3 OHM +5% 0603
R247 R248 R249 R326 R327 R328 R330 R331 R503 R504 R505 R509 R510 R511 R560 R561 R562 R643 R644 R659 R660 R679 R680 R730 R740 R743 R760	RS3AD0102NA-R	RES CHIP,1K 1/16W +/-5% ,0603
R514 R521	RS3AD0103NA-R	RES CHIP,10K 1/16W +/-5% ,0603
R181 R182 R233 R234 R253 R254 R535 R536 R549 R625 R626 R642 R678	RS3AD0104NA-R	RES CHIP,100K 1/16W +/-5% ,0603
R515 R522	RS3AD0123NA-R	RES CHIP,12K 1/16W +/-5%,0603
R605 R606 R627 R628	RS3AD0152NA-R	RMGCFMIC 1K5 OHM +5% 0603
R591 R592	RS3AD0152NA-R	RMGCFMIC 1K5 OHM +5% 0603
R751	RS3AD0183NA-R	RMGCFMIC 18K0 OHM +5% 0603
R744	RS3AD0183NA-R	RMGCFMIC 18K0 OHM +5% 0603
R552	RS3AD0202NA-R	RMGCFMIC 2K0 OHM +5% 0603
R755	RS3AD0221NA-R	RMGCFMIC 220R0 OHM +5% 0603
R130 R135 R149 R150 R205 R206 R225 R226 R320 R321 R398 R399 R617 R618 R633 R634 R667 R668 R693 R694 R697 R698 R741 R742 R753 R764	RS3AD0222NA-R	RMGCFMIC 2K2 OHM +5% 0603
R754	RS3AD0242NA-R	RMGCFMIC 2K4 OHM +5% 0603
R516 R517 R523 R525	RS3AD0332NA-R	RMGCFMIC 3K3 OHM +5% 0603
R607 R608	RS3AD0432NA-R	RMGCFMIC 4K3 OHM +5% 0603
R317 R745 R752	RS3AD0474NA-R	RMGCFMIC 470K0 OHM +5% 0603
R645 R646 R661 R681 R682	RS3AD0562NA-R	RMGCFMIC 5K6 OHM +5% 0603
R190	RS3AD0753NA-R	RES CHIP 75K 1/16W +-5% 0603.
R662 R761	RS3AD0912NA-R	RMGCFMIC 9K1 OHM +5% 0603

Ref. Designator	Part Number	Description
PROCESSOR PCB		
Miscellaneous		
NJ10	H03-SORA1J440GE-R	JACK RCA 1P PPJ-440FEG PP ,GOLD COLOR
NJ1 NJ2 NJ3	H03-SORA64105GN-R	JACK RCA 6P JB060132PG WWWRRR,GOLD COLOR
N114 N115 N313	H03-WN04AB100WH-R	CONN WAFER 2.0MM 4P 35237-0410 WHT
P103 P111	H03-WN04SB00000-R	CONNECT 2.0mm 4P GIL-S-4P-S2T2-EF
P113 P114 P121 P314	H03-WN04SB100WH-R	CONN WAFER 2.0MM 4P 35336-0410 WHT
P100 P107	H03-WN05SB00000-R	CONNECT 2.0mm 5P GIL-S-5P-S2T2-EF
N102	H03-WN06AB00001-R	CNT PLUG BD`BD SOCKET 2.0mm 35237-0610
P109	H03-WN06SB00000-R	CONNECT 2.0mm 6P GIL-S-6P-S2T2-EF
N104	H03-WN07AB100WH-R	CONN WAFER 2.0MM 7P 35237-0710 WHT
N101	H03-WN10AB000WH-R	CONNECT WAFER 2.0mm 10P 35237-1010 WHT
P108	H03-WN10SB100WH-R	CONNECT WAFER 2.0mm 10P 35336-1010 WHT
P106	H03-WN15SB100WH-R	CONNECT WAFER 2.0mm 15P 35336-1510 WHT
P105	H03-WN16SB100WH-R	CONNECT WAFER 2.0mm 16P 35336-1610 WHT
P110	H03-WN19SB00000-R	CONN 2.0MM 19 MA ST NAT MOLEX 35336-1910 0 0
RS232 PCB		
Capacitors		
C441	CEHDC0108NN-R	CE 1MI0F +20% 6.3V 8X11.5 85C
C411 C412	H03-CEHEC01075E-R	CE 100U0F +20% 10.0V 5X11 85C P5MM SK 100/10V 5 X11
C415	H03-CEHEC02275E-R	CE 220UF +20% 10.0V D6.3XL11 P5MM 85C SK 220/10V 5 X11
C601 C604 C607	CEHFC01062S-R	CE 10UF +20% 16V D4XL7 P2.5MM 2000hours 85C
C302 C440	CEHFC0107NN-R	CE 100U0F +20% 16.0V 85C
C442	H03-CEHFC04765E-R	CE47UF +20% 16.0V D5XL11 P5MM 85C SK 47/16V 5 X11
C406 C419 C606	H03-CEHIC01055E-R	CE 1UF +20% 50V D5XL11 P5MM 85C SK 1/50V 5 X11
C305 C401	H03-CEMIC01045E-R	CAP ELEC 0.1uF 50v M 5x11 SHL P5MM SK 0.1/50V 5X11
C407	CPIIC0223NN-R	CPF 22N0F +10% 50.0V
C408	CPIIC0682NN-R	CPF 6N8F +10% 50.0V
C306	CPIKC0473NN-R	CPF 47N0F +10% 100.0V
C307 C308 C309	H03-CEMIC0334AH-R	CAP ELEC 0.33UF M 5X11 SHL 50V SAMYOUNG
C403	H03-CEMIC0564AH-R	CAP ELEC 0.56UF 50V M 5X11 SHL SAMYOUNG
C402	CZDII0100BE-R	CAP CHIP 10PF 50V CH D NP0 0603
C416 C417 C418	CZJII0101BE-R	CAP CHIP 100P0F +5% -5% 50.0V NP0 0603
C405	CZJII0270BE-R	CAP CHIP 27P0F +5% -5% 50.0V NP0 0603
C404	CZJII0300BE-R	CAPA CHIP 30PF 50V CH NP0 +5% 0603
C420 C421 C422 C423	CZJII0390BE-R	CAP CHIP 39PF 50V CH J NPO 0603
C410 C413	CZKII0103BC-R	CAP CHIP 10N0F +10% -10% 50.0V X7R 0603
C313 C314 C316 C317	CZKII0122BC-R	CAP CHIP 1N2F +10% -10% 50.0V X7R 0603
C303 C304 C310 C311 C315 C414 C443	CZZFI0104BF-R	CAP CHIP 100N0F +80% -20% 16.0V Y5V 0603
C301	CZJII0471BE-R	CCCFMIC 470P0F +5% -5% 50.0V NP0
C444 C445 C446	CZJII0101BE-R	CAP CHIP 100P0F +5% -5% 50.0V NP0 0603
C409	CZKII0103BC-R	CAP CHIP 10N0F +10% -10% 50.0V X7R 0603
C603	CZZFI0104BF-R	CAP CHIP 100N0F +80% -20% 16.0V Y5V 0603
C602 C605	CZJII0330BE-R	CAP CHIP 33P0F +5% -5% 50.0V NP0 0603
Semiconductors		
D401	H03-DZGE6V220MA-R	DIODE ZENER MZO.5GE6V2-20 6.2V 20MA
Q301 Q302	H03-TRKTA107MNA-R	TR-SLPSWA KRA107M PNP
Q405	H03-TRKTA1267GR-R	KTA1267-GR TO-92M PNP
Q402 Q404	H03-TRKTC3199GR-R	KTC3199-GR TO-92M NPN
D601 D602 D604 D605 D606	H03-DS05GBUSCNB-R	DIODE PG05GBUSC
D301 D302 D303 D304 D305 D306 D307 D310	H03-DS1S50094NB-R	D-SLP 1SS355 35.0V 225MI0A
Q305 Q306	H03-TRKTA1504ND-R	TRANSISTOR PNP KTA1504Y(S)SOT-23
Q303 Q304	H03-TSKRC107SND-R	KRC107S SOT-23 NPN
IC32 IC33	H03-ICPC17T10B1-R	IC PHOTOCOUPLER PC-17T1 DIP4 KODENSHI
IC34	H03-ICBU4052BCF-R	IC CMOS BU4052BCF SOP16 Dual 4-channel analog multiplexer / demultiplexer
IC406	H03-ICBU4094BD3-R	IC CMOS BU4094BCF SOP16 8-bit compatible shift / store register
IC401	H03-ICLC74763ME-R	LC74763M-9602-E SOP30 On-Screen Display LSI
IC61	H03-ICLM02068D2-R	IC-OPERAMP NJM2068M-TE1 DUAL SOP8

Ref. Designator	Part Number	Description
RS232 PCB		
IC31	H03-ICMAX322316-R	IC RS-232 LINE DRIVER MAX3223CDWR SOIC16P
IC405	H03-ICMM1505XDL-R	IC-VIDEOPROC MM1505XNRE AMPLIFIER&DRIVER
D607	H03-DS1S50094NB-R	D-SLP 1SS355 35.0V 225MI0A
D608	H03-DSKDZ3V30NB-R	DIODE ZENER,KDZ3.3EV KEC
Q307 Q310 Q311	H03-TSKRC107SND-R	KRC107S SOT-23 NPN
Resistors		
R317	RC3DI0101IN-R	RCF 100R0 OHM +5% 250MI0W
R408	RC3DI0561IN-R	RCF 560R0 OHM +5% 250MI0W
R618 R619	RS1AD0750NA-R	RES CHIP 75OHM 1% 1/16W 0603
R316 R602 R603	RS3AD0000NA-R	RES CHIP, 0 R 1/16W +/-5%, 0603
R407	RS3AD0101NA-R	RES CHIP,100R 1/16W +/-5%,0603
R326 R401 R402 R418 R419 R420 R715 R447	RS3AD0102NA-R	RES CHIP,1K 1/16W +/-5% ,0603
R301 R306 R318 R319 R325 R406 R415	RS3AD0103NA-R	RES CHIP,10K 1/16W +/-5% ,0603
R320 R321 R322	RS3AD0104NA-R	RES CHIP,100K 1/16W +/-5% ,0603
R426 R428	RS3AD0105NA-R	RES CHIP 1M 1/16W +5% 0603
R403 R425 R427 R442	RS3AD0121NA-R	RMGCFMIC 120R0 OHM +5% 0603
R412	RS3AD0124NA-R	RES CHIP,120K 1/16W +/-5%,0603
R405	RS3AD0152NA-R	RMGCFMIC 1K5 OHM +5% 0603
R327 R328	RS3AD0221NA-R	RMGCFMIC 220R0 OHM +5% 0603
R411	RS3AD0224NA-R	RES CHIP,220K 1/16W +/-5%,0603
R312	RS3AD0271NA-R	RMGCFMIC 270R0 OHM +5% 0603
R310 R413	RS3AD0392NA-R	RMGCFMIC 3K9 OHM +5% 0603
R309 R311	RS3AD0470NA-R	RMGCFMIC 47R0 OHM +5% 0603
R313 R314	RS3AD0471NA-R	RMGCFMIC 470R0 OHM +5% 0603
R303 R304 R305	RS3AD0472NA-R	RES CHIP,4K7 1/16W +/-5%,0603
R307 R308	RS3AD0473NA-R	RES CHIP,47K 1/16W +/-5%,0603
R324	RS3AD0511NA-R	RMGCFMIC 510R0 OHM +5% 0603
R302	RS3AD0680NA-R	RMGCFMIC 68R0 OHM +5% 0603
R404	RS3AD0682NA-R	RMGCFMIC 6K8 OHM +5% 0603
R315	RS3AD0332NA-R	RMGCFMIC 3K3 OHM +5% 0603
R323	RS3AD027ANA-R	2R7 ohm 1/16W 5% 0603
R617	RS1AD0750NA-R	RES CHIP 75OHM 1% 1/16W 0603
R601	RS1AD5493NA-R	RES,CHIP 549K 1/16W +/-1% 0603
R421 R422 R423 R424 R444 R445 R446	RS3AD0102NA-R	RES CHIP,1K 1/16W +/-5% ,0603
R299 R300 R606 R610 R611	RS3AD0103NA-R	RES CHIP,10K 1/16W +/-5% ,0603
R615	RS3AD0104NA-R	RES CHIP,100K 1/16W +/-5% ,0603
R443	RS3AD0123NA-R	RES CHIP,12K 1/16W +/-5%,0603
R607 R608	RS3AD0223NA-R	RES CHIP,22K 1/16W +/-5%,0603
R609	RS3AD0224NA-R	RES CHIP,220K 1/16W +/-5%,0603
R614	RS3AD0470NA-R	RMGCFMIC 47R0 OHM +5% 0603
R613 R604 R605	RS3AD0473NA-R	RES CHIP,47K 1/16W +/-5%,0603
R612	RS3AD0124NA-R	RES CHIP,120K 1/16W +/-5%,0603
R450	RS3AD0332NA-R	RMGCFMIC 3K3 OHM +5% 0603
Miscellaneous		
L301 L302	RS3BB0000NA-R	RES CHIP 0 OHM +5% 100MI0W 0805
L303 L304	H03-FB2522012HF-R	FCM2012HF-252T02 2500ohm SURFACE MT 2012
Y401	H03-OSXBE14M3AU-R	CRYSTAL 14.31818MHz WOOIN
Y402	H03-OSXBE17M7AU-R	CRYSTAL 17.734475MHz WOOIN
NJ33 NJ34 NJ35 NJ36 NJ37 NJ38	H03-SOJW2350SNN-R	JACK PHONE 3.6 EP-1401A 1P BK
NJ31	H03-SORA10003GN-R	JACK RCA 1P JE010003SG GND YELLOW,GOLD COLOR
N608	H03-WN10AB000WH-R	CONNECT WAFER 2.0mm 10P 35237-1010 WHT
P315	H03-WN18DI00000-R	CONNECT GF120-18S-TS 1.25mm 18P
GND1	H03-ZMC12S16A00-R	BKT GROUND
PCB2	H03-ZMD27S05A00-R	BKT IPOD
NJ32	SOPA96063NN-R	JACK D-SUB 9P 87204-6063 W/DUST COVER BK
N607	H03-WN05SB26000-R	WIRE ASS'Y,UL1533/2547#26(TA) 260mm 2.0mm 5P GRY
L401 L402 L403 L405	H03-LAINB0470CR-R	LF 47U0H +10% 5.8 OHM 500MI0A
L404	H03-LALNB056ACR-R	INDUCTOR COIL AL02TB5R6J 5.6UH 1.9OHM +5%

Ref. Designator	Part Number	Description
RS232 PCB		
BD31	H03-FB3012012CF-R	FCM2012CF-301T04 0805
NJ60	H03-SO1R018H91E-R	DA1R018H91E
STANDBY POWER SUPPLY		
Capacitors		
C113 C115 C118 C121	CCZID0104NA-R	CC 100N0F +80% -20% 50.0V F
C102 C103 C104 C108 C109 C110	CCKIC0103NA-R	CC 10N0F +10% -10% 50.0V Y5P
C101	CCMOC0472NF-R	CC 4N7F +20% -20% 250.0V Y5V
C125	CEHGC0687NN-R	CE 680U0F +20% 25.0V 85C
C114	CEHIC01055E-R	CE 1UF +20% 50V D5XL11 P5MM 85C
C119 C120	CEHIC01065E-R	CE 10U0F +20% 50.0V 85C P5MM 5X11
C107 C111	CEMGC04775E-R	CE 470U0F +/-20% 25.0V 10X13 85C
C105	CEMJC02275E-R	CAP ELEC 220UF 63V M 10X16 85C 120HZ ELITE
C106	H03-CEHIC0107NN-R	CE 100U0F +20% 50.0V 85C P5.0MM
C116	H03-CEMJH0227NA-R	CAP ELECTROYTIC,220uF 35V M 8x11 P=5MM
C203 C204 C205	H03-CFHOA0104NN-R	CAP POLY METAL CPM 100NF 250V 20% TAE YANG
C100	CFMVA0104NN-R	CPPMX 100N0F +20% -20%
C201 C202	H03-CEMJA0109KB-R	CAP ELEC 10000UF 63V M 30X45 LSW103M1JP45M
Semiconductors		
D101 D111	H03-DG1N04148NB-R	D-SLP 1N4148 100.0V 150E-3A
D102 D103 D105 D106 D107 D108 D109 D112 D113 D117 D118 D121	H03-DR1N04004NA-R	D-SR 1N4004 400.0V 1.0A
D119 D120	H03-DZGE22V05MA-R	MZ0.5GE22V-5 22V 5mA
D116	H03-DZGE4V320MA-R	MZ0.5GE4V3-20 4.3V 20mA
D104	H03-DZGE9V120MA-R	MZ0.5GE9V1-20 9.1V 20mA
D201	H03-DURS10040NA-R	RS1004 RS-10
IC12	H03-ICKIA7805I2-R	IC-REGPOSFXD KIA7805API NORMAL TO-220IS +5V
IC11	H03-ICKIA78D3A0-R	KIA78D33PI 3.3V
Resistors		
R103	RC3DI0102IN-R	RCF 1K0 OHM +5% 250MI0W
R102 R109	RC3DI0103IN-R	RCF 10K0 OHM +5% 250MI0W
R110	RC3DI0104IN-R	RCF 100K0 OHM +5% 250MI0W
R106 R107	RC3DI010AIN-R	RCF 1R0 OHM +5% 250MI0W
R104	RC3DI0153IN-R	RCF 15K0 OHM +5% 250MI0W
R105	RC3DI0222IN-R	RCF 2K2 OHM +5% 250MI0W
R112	RC3DI0272IN-R	RCF 2K7 OHM +5% 250MI0W
R113	RC3DI0470NN-R	REC,CARBON,47,1/4W,+/-5%,SIZE=1/8W
R111	RC3DI0562IN-R	RCF 5K6 OHM +5% 250MI0W
R115 R116	H03-RM3FC0100BN-R	RES METAL OXIDE 10R OHM+5% 1.0W
R108	H03-RM3GC0330CN-R	RESISTOR METAL OXIDE 33 OHM +5% 2.0W
Miscellaneous		
FH10 FH12 FH23 FH24	H03-SOPS1FEHDNN-R	TERMFUSEHLDR FUSE-HOLDER J4210020001X
Q101 Q102	H03-TRMPSA06NNA-R	TR-SLPLF MPSA06 N 500MI0A TO-92
G101 G103	H03-ZNMSA4004SN-R	TERMLUG GND
F101	H03-FUGF212A065-R	FUSE 65TS SERIES 250V 12A 326012 USA ONLY
F201	H03-FUGF23000XX-R	FUSE 239 SERIES 003 250V 3A 2183.15MXP USA ONLY
F101	H03-FUGF26A30XX-R	FUSVDETIMELG 6.3A 250.0 V 5X20 21806.3MXP EUROPE ONLY
F201	H03-FUGF202A0XX-R	FUSVDETIMELG 2.0A 250.0 V 5X20 218002MXP EUROPE ONLY
SK11	H03-RLL1227111K-R	RELAY PWR 12.0V 270.0OHM 10.0A
NS31	H03-SOXA2202DNN-R	A202D0031P 2P
NS30	H03-SOXA27014NN-R	CON MAINS INLET A/C INLET 7014-NGP
TP11	H03-TXPWMR740B0-R	AVR745 POWER TRANSFORMER (ST/BY)-120V USA ONLY
TP11	H03-TXPWMEI45B0-R	AVR745EU POWER TRANSFORMER (ST/BY)-230V EUROPE ONLY
N307	H03-WG04SB82000-R	WIRECONASY DL 2.0MM 04P 200MM UL1007 RIBBON 26 1
P305	H03-WN02SE00000-R	CON 3.96MM PITCH HEADER 2 POS MOLEX 35328-0210
P306	H03-WN02SE00002-R	CONNECT WAFER,YW396-03V 7.92mm 2P ,DONG HO

Ref. Designator	Part Number	Description
STANDBY POWER SUPPLY		
P301	H03-WN03SE00000-R	CON 3.96MM PITCH MOLEX 35313-0310
P302	H03-WN05SD100WH-R	CONN WAFER 2.5MM 5P 5267-05A WHT
P304	H03-WN06SE00000-R	CONNECT 6P 3.96MM 35313-0610
P303	H03-WN11SB00001-R	CONN 2.0MM 11P GIL-S-11P-S2T2-EF
N310	H03-WN15AB100WH-R	CONNECT WAFER 2.0mm 15P 35237-1510 WHT
P308	H03-WN15SB100WH-R	CONNECT WAFER 2.0mm 15P 35336-1510 WHT
N311	H03-WN16AB100WH-R	CONNECT WAFER 2.0mm 16P 35237-1610 WHT
P309	H03-WN16SB100WH-R	CONNECT WAFER 2.0mm 16P 35336-1610 WHT
N312	H03-WN19AB00000-R	CONN 2.0MM 19 MA R NAT SOCKET MOLEX 35237-1910 0 0
P313	H03-WN19SB00000-R	CONN 2.0MM 19 MA ST NAT MOLEX 35336-1910 0 0
HK21	H03-ZMC11HS0400-R	HEATSINK DIODE 47X26X12 AVR630
HK11	H03-ZMC12HS0100-R	AC HEATSINK 17*15*30 AVR520 -- ME
SURROUND PCB		
Capacitors		
C204 C206 C304 C306 C504 C506	CCKID0271NN-R	CC 270P0F +10% -10% 50.0V 2B4
C207 C307 C507	CCCIC0030NN-R	CAP CERAMIC 3PF 50V C CH TAP
C209 C309 C509	CCKIC0181NA-R	CC 180P0F +10% -10% 50.0V Y5P
C215 C315 C517	CCKIC0332NA-R	CC 3N3F +10% -10% 50.0V Y5P
C607 C608 C611	CCZGC0104NA-R	CAP CERAMIC 100NF 25V Z Z5U TAP
C208 C308 C508	H03-CEHEC02275E-R	CE 220UF +20% 10.0V D6.3XL11 P5MM 85C SK 220/10V 5 X11
C205 C305 C505	H03-CEHGC01075E-R	CE 100U0F +20% 25.0V 6.3X11 85C P5MM SK 100/25V 6.3 X11
C101 C203 C303 C503 C609 C610 C614	H03-CEHIC01065E-R	CE 10U0F +20% 50.0V 85C P5MM 5X11 SK 10/50V 5 X11
C201 C202 C301 C302 C501 C502	H03-CEHJA0477MN-R	CE 470U0F +20% 63.0V 85C SK 470/63V 13 X21
C604	CEMFA02285E-R	CE 2200UF 16V M 12.5X20 P5MM
C600	CEMFA0478BK-R	CAP ELEC 4700UF 16V M 16X25 85C 120HZ ELITE
C601 C602 C603	CPIKC0473NN-R	CPF 47N0F +10% 100.0V
C210 C310 C510	CPJJC0683NN-R	CAP POLY NON METAL 68NF 63V J TAP
C211 C212 C311 C312 C511 C512	H03-CEMKC0106AH-R	CAP ELEC 10UF 100V M 6.3X11 SHL
C213 C214 C313 C314 C513 C514	H03-CPJJC0104NN-R	CAP POLYESTER NON METAL 0.1uF 63V J TAP PCMT365 76104
C216 C316 C516	CCKIC0103NA-R	CC 10N0F +10% -10% 50.0V Y5P
C606	RC3DI0100IN-R	CAP ELEC 6800UF 16V M 16X25 85C 120HZ SK 6800/16V 16 X25
C606	H03-CEMFA0688BK-R	CAP ELEC 6800UF 16V M 16X25 85C 120HZ SK 6800/16V 16 X25
Semiconductors		
D101 D201 D202 D203 D204 D301 D302 D303 D304 D501 D502 D503 D504	H03-DG1N04148NB-R	D-SLP 1N4148 100.0V 150E-3A
D602 D605	H03-DR1N04004NA-R	D-SR 1N4004 400.0V 1.0A
Q205 Q305 Q505	H03-TR2SA1145YF-R	TRANSISTOR PNP 2SA1145-Y(F) TO-92 HFE:120~240
Q208 Q211 Q308 Q311 Q508 Q511	H03-TRKTA1024NA-R	TR-SLPLF KTA1024 Y PNP 50MI0A -150V
Q101 Q206 Q306 Q506	H03-TRKTA1268NA-R	TR-SHPLF KTA1268BL PNP 100MI0A 120V
Q204 Q304 Q504	H03-TRKTC3198NA-R	TR-SLPLF KTC3198BL NPN 150MI0A
Q201 Q202 Q203 Q207 Q220 Q301 Q302 Q303 Q307 Q320 Q501 Q502 Q503 Q507 Q520	H03-TRKTC3200NA-R	TR-SHPLF KTC3200BL NPN 100MI0A 120V
Q209 Q212 Q309 Q312 Q509 Q512	H03-TRKTC3206NA-R	TR-SLPLF KTC3206 Y NPN 50MI0A 150V
IC64	H03-ICKA378R05P-R	KIA378R05PI 5V TO-220IS-4
IC61	H03-ICKIA78D3A0-R	KIA78D33PI 3.3V
IC63	H03-ICKIA7905I2-R	IC-REGNEGFXD KIA7905PI -5V
D601	H03-DUKBU6GMF6N-R	KBU6G-MF RS-6 Kink Type
Q216 Q316 Q516	H03-TR2SA1859BC-R	TR-SHPLF 2SA1859A PNP -2.0A
Q219 Q319 Q519	H03-TR2SA1986AC-R	TRANSISTOR PNP 2SA1986-R(AC,F) HFE:55~110 ADD MICA SHEET SIZ
Q217 Q317 Q517	H03-TR2SC4883BC-R	TR-SHPLF 2SC4883A NPN 2.0A
Q218 Q318 Q518	H03-TR2SC5358AC-R	TRANSISTOR NPN 2SC5358-R(AC,F) HFE:55~110 ADD MICA SHEET SIZ
Q215 Q315 Q515	H03-TRKTA1360BE-R	TRANSISTOR PNP KTA1360 TO-126

Ref. Designator	Part Number	Description
SURROUND PCB		
Q214 Q314 Q514	H03-TRKTC3114NE-R	TRANSISTOR NPN KTC3114 TO-126
Q213 Q313 Q513	H03-TRKTC3423BE-R	TRANSISTOR NPN KTC3423 TO-126
Resistors		
R225 R233 R325 R333 R525 R533	H03-RM3EG0100LN-R	RMF 10R0 OHM +5% 500MI0W
R243 R299 R343 R399 R543 R599	RC3DI0100IN-R	RCF 10R0 OHM +5% 250MI0W
R226 R236 R326 R336 R526 R536	RC3DI0101IN-R	RCF 100R0 OHM +5% 250MI0W
R101 R605	RC3DI0103IN-R	RCF 10K0 OHM +5% 250MI0W
R246 R346 R546	RC3DI0104IN-R	RCF 100K0 OHM +5% 250MI0W
R228 R235 R328 R335 R528 R535	RC3DI0150IN-R	RCF 15R0 OHM +5% 250MI0W
R239 R241 R339 R341 R539 R541	RC3DI0152IN-R	RCF 1K5 OHM +5% 250MI0W
R220 R221 R240 R320 R321 R340 R520 R521 R540	RC3DI0153IN-R	RCF 15K0 OHM +5% 250MI0W
R209 R210 R309 R310 R509 R510	RC3DI0162IN-R	RCF 1K6 OHM +5% 250MI0W
R219 R222 R223 R224 R319 R322 R323 R324 R519 R522 R523 R524	RC3DI0201IN-R	RCF 200R0 OHM +5% 250MI0W
R205 R206 R207 R305 R306 R307 R505 R506 R507	RC3DI0221IN-R	RCF 220R0 OHM +5% 250MI0W
R244 R344 R544	RC3DI0223IN-R	RCF 22K0 OHM +5% 250MI0W
R227 R237 R327 R337 R527 R537	RC3DI022AIN-R	RCF 2R2 OHM +5% 250MI0W
R229 R329 R529	RC3DI0282IN-R	RCF 2K8 OHM +5% 250MI0W
R201 R301 R501	RC3DI0331IN-R	RCF 330R0 OHM +5% 250MI0W
R202 R302 R502	RC3DI0333IN-R	RCF 33K0 OHM +5% 250MI0W
R102 R242 R342 R542	RC3DI0393IN-R	RCF 39K0 OHM +5% 250MI0W
R204 R304 R504	RC3DI0433IN-R	RCF 43K0 OHM +5% 250MI0W
R208 R308 R508	RC3DI0471IN-R	RCF 470R0 OHM +5% 250MI0W
R211 R214 R215 R216 R217 R218 R311 R314 R315 R316 R317 R318 R511 R514 R515 R516 R517 R518	RC3DI0561IN-R	RCF 560R0 OHM +5% 250MI0W
R234 R334 R534	RC3DI0820IN-R	RCF 82R0 OHM +5% 250MI0W
R213 R313 R513	RM1DI0142IN-R	RMF 1K4 OHM +1% 250MI0W
R212 R312 R512	RM1DI0333IN-R	RMF 33K0 OHM +1% 250MI0W
R230 R330 R530	RC3DI0751IN-R	RCF 750R0 OHM +5% 250MI0W
R238 R338 R538	H03-RI3IC022BEN-R	RW 220MI0 OHM +5% 5.0W 100PPM/`C -100PPM/`C
R245 R345 R545	H03-RM3FC0100BN-R	RES METAL OXIDE 10R OHM+5% 1.0W
R601 R602	H03-RM3GC010ACN-R	RESISTOR METAL OXIDE 1R0 OHM +5% 2.0W
R603 R604	H03-RM3GC039ACN-R	RESISTOR METAL OXIDE 3R9 OHM +5% 2.0W
VR201 VR301 VR501	H03-RT7EA0201NB-R	PR 200R0 OHM +20% 500MI0W
Miscellaneous		
L201 L301 L501	H03-LCNNNA050NA-R	LFA 1MM 10MM 5 LEFT 0.0MM NONE SP-2516
G101 G102 G105	H03-ZNMSA4004SN-R	TERMLUG GND
F601 F602	H03-FURN23150SR-R	FUSE SR-5 SERIES 3821315 SR-5- 3.15A 250V 35A
NJ401	H03-SOPA61M707G-R	SH061M707G GN BN TA
N502	H03-WG06SE81200-R	WIRE ASS'Y UL1007#16 120mm 3.96mm 6P RED
N501	H03-WG07AD02700-R	WIRE ASS'Y,UL1007#20(TA) 270mm 2.5mm 7P WHT
P201 P301 P501	H03-WN02AD00000-R	CONNECT WAFER 2.5mm 2P 5268-02A WHT ANGLE
P506	H03-WN03SB00000-R	CONNECT 2.0mm 3P GIL-S-3P-S2T2-EF
N503	H03-WN03SD100WH-R	CONN WAFER 2.5MM 3P 5267-03A WHT
N504	H03-WN05SB00000-R	CONNECT 2.0mm 5P GIL-S-5P-S2T2-EF
N505	H03-WS6262605EN-R	WIRECONASY DL 2.0MM 6P 260MM UL1533 SHIELD 26 1

Ref. Designator	Part Number	Description
VIDEO PCB		
Capacitors		
C101 C103 C283 C284	H03-CEHDC0108NN-R	CE 1000UF +20% 6.3V 8X11.5 85C P5MM
C104 C105 C106 C109 C111 C112 C114 C115 C117 C118 C120 C122 C123 C124 C125 C130 C167 C172 C287	H03-CEHEC02275E-R	CE 220UF +20% 10.0V D6.3XL11 P5MM 85C SK 220/10V 5 X11
C128 C129 C131 C132 C133 C134 C135 C136 C137 C138 C169 C170 C270 C271 C278 C279	H03-CEHEC0477MN-R	CE 470U0F +20% 10.0V 6.3X11 85C P5MM SK 470/10V 6.3 X11
C139 C243 C245 C251 C257 C277 C288 C292 C296 C300 C304 C308 C349 C356 C367 C381 C382 C391 C536	H03-CEHFC01075E-R	CE 100UF +-20% 16.0V D5XL11 P5MM 85C SK 100/16V 5 X11
C145 C150 C155 C160 C165 C285 C310 C313 C331 C333 C337 C342	H03-CEHFC04765E-R	CE47UF +20% 16.0V D5XL11 P5MM 85C SK 47/16V 5 X11
C242 C249 C255 C265 C290 C291 C294 C295 C298 C299 C302 C303 C306 C307	H03-CEHIC01055E-R	CE 1UF +20% 50V D5XL11 P5MM 85C SK 1/50V 5 X11
C100 C102 C107 C108 C110 C113 C116 C119 C121 C126 C127 C168 C182 C185 C188 C190 C195 C204 C210 C239 C240 C241 C276 C286 C316 C317 C318 C319 C320 C321 C322 C323 C324 C353 C354 C360 C418 C527 C535	H03-CEHIC01065E-R	CE 10U0F +20% 50.0V 85C P5MM 5X11 SK 10/50V 5 X11
C351 C352 C359 C526	H03-CEHIC02255E-R	CE 2U2F +20% 50V D5XL11 P5MM 85C SK 2.2/50V 5 X11
C248	H03-CEHIC0474NN-R	CE 0.47UF +20% 50.0V 85C 5X11 P5MM
C439 C448 C467	H03-CEMFC0226NN-R	CAP ELEC 22UF 16V M P5MM SK 22/16V 5 X11
C252	CPIIC0223NN-R	CPF 22N0F +10% 50.0V
C514	CPIIC0682NN-R	CPF 6N8F +10% 50.0V
C523	CSKIE0392BC-R	CAP,CHIP FORM 3.9N +/-10% 50V X7R 0603
C400 C401 C402 C403 C404 C405 C412 C430 C460 C464 C482 C483 C506 C509 C517	CTMFJ0106ZN-R	CAP TANTAL/CHIP 10uF 16V T491B106K016AS 3528
C141 C142 C143	CZJII0101BE-R	CAP CHIP 100P0F +5% -5% 50.0V NP0 0603
C491 C492	CZJII0180BE-R	CAP CHIP 18PF 50V CH J NP0 0603
C275	CZJII0220BE-R	CCCFMIC 22P0F +5% -5% 50.0V NP0
C420 C421	CZJII0330BE-R	CAP CHIP 33P0F +5% -5% 50.0V NP0 0603
C529	CZJII0331BE-R	CAP CHIP 330P0F +5% -5% 50.0V NP0 0603
C261 C262 C263 C264	CZJII0390BE-R	CAP CHIP 39PF 50V CH J NPO 0603
C193	CZKFI0823BC-R	CAP CHIP 82NF +/-10% 16V 0603 X7R
C444 C445 C446 C454 C455 C456 C457 C458 C462 C466 C471 C472 C498 C499 C504 C505 C508 C511	CZKII0102BC-R	CAP CHIP 1N0F +10% -10% 50.0V X7R 0603
C184 C187 C197 C199 C201 C206 C212 C214 C230 C232 C235 C250 C493 C494 C518	CZKII0103BC-R	CAP CHIP 10N0F +10% -10% 50.0V X7R 0603
C194	CZKII0822BC-R	CAP CHIP 8N2F +10% -10% 50.0V X7R 0603

Ref. Designator	Part Number	Description
VIDEO PCB		
C140 C144 C149 C154 C159 C164 C180 C183 C186 C189 C191 C196 C198 C200 C205 C211 C213 C229 C231 C244 C246 C256 C289 C293 C297 C301 C305 C309 C311 C312 C314 C315 C325 C327 C332 C334 C336 C338 C339 C343 C357 C361 C362 C363 C368 C369 C370 C371 C372 C373 C374 C375 C376 C377 C378 C379 C380 C383 C384 C385 C386 C387 C388 C389 C390 C392 C393 C394 C395 C396 C397 C398 C399 C406 C407 C408 C409 C410 C411 C413 C414 C415 C416 C417 C419 C423 C425 C431 C432 C433 C434 C435 C436 C437 C440 C441 C442 C443 C449 C450 C451 C452 C453 C461 C465 C468 C469 C470 C475 C476 C477 C478 C479 C480 C481 C484 C485 C486 C487 C488 C489 C490 C496 C497 C501 C502 C507 C510 C512 C513 C519 C520 C521 C533 C534 C537 C541 C542 C543 C544		
	CZZFI0104BF-R	CAP CHIP 100N0F +80% -20% 16.0V Y5V 0603
C207 C422 C424 C473 C474 C495	CTMFJ0106ZN-R	CAP TANTAL/CHIP 10uF 16V T491B106K016AS 3528
C530	CZCII0050BE-R	CAP CHIP 5PF 50V C NPO 0603
C247	CZDII0100BE-R	CAP CHIP 10PF 50V CH D NP0 0603
C236 C237 C238 C267 C268 C269 C280 C281 C282 C538	CZJII0101BE-R	CAP CHIP 100P0F +5% -5% 50.0V NP0 0603
C273 C340	CZJII0220BE-R	CCCFMIC 22P0F +5% -5% 50.0V NP0
C254	CZJII0270BE-R	CAP CHIP 27P0F +5% -5% 50.0V NP0 0603
C253 C539	CZJII0300BE-R	CAPA CHIP 30PF 50V CH NP0 +5% 0603
C166 C171	CZJII0331BE-R	CAP CHIP 330P0F +5% -5% 50.0V NP0 0603
C176 C503	CZKII0102BC-R	CAP CHIP 1N0F +10% -10% 50.0V X7R 0603
C209 C258 C347 C348 C515 C516 C524 C525	CZKII0103BC-R	CAP CHIP 10N0F +10% -10% 50.0V X7R 0603
C350 C358	CZKII0223BC-R	CAP CHIP 22N0F +10% -10% 50.0V X7R 0603
C272 C274	CZKII0391BC-R	CAP CHIP 390PF 50V X7R K 0603
C173	CZKII0561BC-R	CAP CHIP 560P0F +10% -10% 50.0V X7R 0603
C522	CZKII0821BC-R	CAP CHIP 820P0F +10% -10% 50.0V X7R 0603
C174 C175 C177 C178 C179 C192 C208 C233 C259 C260 C364 C365 C366 C426 C428 C429 C438 C447 C459 C463 C500 C528 C531	CZZFI0104BF-R	CAP CHIP 100N0F +80% -20% 16.0V Y5V 0603
Semiconductors		
Q107 Q108 Q109 Q124	H03-TRKTA1267GR-R	KTA1267-GR TO-92M PNP
Q100 Q102	H03-TRKTC3199GR-R	KTC3199-GR TO-92M NPN
IC30	H03-ICKIA7806I2-R	IC KIA7806AP VOLTAGE REGULATOR TO-220AB +6V
IC49	H03-IC74LVC254D-R	IC SN74LVC257AD SOIC-16 Quadruple 2-Line To 1-Line Data Selector/Multiplexer With 3-State Outputs
IC64	H03-ICAD1580BRT-R	IC AD1580BRTZ-REEL7 1.2 V Micropower, Precision Shunt Voltage Reference
Q121 Q122	H03-TR2N7002LND-R	MOSFET N-CHANNEL 2N7002LT1G SOT-23
D130 D131 D132 D133 D135 D136 D137 D138 D139 D140 D141 D142	H03-DS05GBUSCNB-R	DIODE PG05GBUSC

Ref. Designator	Part Number	Description
VIDEO PCB		
D100 D101 D102 D103 D104 D105 D106 D107 D108 D109 D120 D121 D122 D123 D124 D125 D129 D143 D144	H03-DS1S50094NB-R	D-SLP 1SS355 35.0V 225MI0A
IC56 IC57 IC61 IC62	H03-DSAMP0514MN-R	DIODE TVS ARRAY RCLAMP0514M MSOP-10L
D126 D127 D128	H03-DSBAV99LTNB-R	DIODE SWITCHING BAV99LT1G SOT-23
IC50 IC51 IC53	H03-IC74A244PD8-R	IC SN74ALVC244PWR TSSOP20 Octal Buffer/Driver With 3-State Outputs
IC66	H03-IC74CB3T3D2-R	IC SN74CB3T3306DCTR SSOP-8 Dual Bus Switch Voltage Translator
IC40	H03-ICADA44106A-R	IC ADA4410-6ACPZ Integrated Video Filter with Selectable Cutoff Frequencies for GBR, HD/SD, Y, C, and CVBS
IC39	H03-ICADA44123A-R	IC ADA4412-3ARQZ Integrated Triple Video Filter
IC29	H03-ICADV7320KS-R	IC ADV7320LKSTZ 12-bit 216MHz Video Encoder with NSV and Macrovision® Copy Protection
IC24	H03-ICADV7401EF-R	ADV7401BSTZ-110 LQFP100 10-Bit, Integrated, Multiformat SDTV/HDTV Video Decoder
IC12 IC42 IC45 IC59	H03-ICBU4053BB4-R	IC BU4053BCF SOP16 Triple 2-channel analog multiplexer / demultiplexer
IC18 IC19 1C20 IC21 IC22	H03-ICBU4094BD3-R	IC CMOS BU4094BCF SOP16 8-bit compatible shift / store register
IC65	H03-ICCJT1172N5-R	CJT1117-2.5 SOT-223 1A LOW DROPOUT LINEAR REGULATOR
IC11	H03-ICCJT1173N3-R	IC VOLTAGE REGULATOR CJT117-3.3 SOT-223
IC43 IC46	H03-ICEEP24LCD2-R	24LC08BT-I/SNG SOIC-8P MICROCHIP SERIAL EEPROM
IC47	H03-ICFLI2300NN-R	IC VIDEO ENHANCER FLI2300-BD PQFP-208
IC27	H03-ICLC74763ME-R	LC74763M-9602-E SOP30 On-Screen Display LSI
IC17 IC25 IC26 IC33 IC34 IC35 IC36 IC37	H03-ICM1503XNRE-R	MM1503XNRE SOT-26B Video Switch 75 driver Y/C mix
IC32	H03-ICMM1511XDL-R	IC-VIDEO SW MM1511XNRE SOT-26B Video Switch 75 driver Y/C mix
IC13 IC14 IC15 IC16	H03-ICNJM2296D3-R	IC-LINEAR NJM2296M-TE1 5-INPUT 3-OUTPUT VIDEO SWITCH
IC38	H03-ICNJM2586MN-R	IC VIDEO AMP NJM2586M-TE1 DMP24
IC55	H03-ICSII903144-R	IC SIL9031CTU TQFP144 Dual input HDMI Receiver w/6/8 - channel audio (480p/720p/1080
IC54	H03-ICSIL903080-R	PanelLink CinemaTransmitter SII9030CTU TQFP80
IC23 IC28 IC31	H03-ICTSH95IDB4-R	IC-VIDEOPROC TSH95ID VIDEO AMPLIFIER
Q119 Q120	H03-TR2N7002LND-R	MOSFET N-CHANNEL 2N7002LT1G SOT-23
Q101	H03-TRKTC3875ND-R	TRANSISTOR NPN KTC3875S SOT23 NPN
Q110 Q111 Q112 Q123	H03-TSKRA107SNI-R	KRA107S SOT-23 PNP
Q103 Q104 Q105 Q106 Q113 Q114 Q115 Q118	H03-TSKRC107SND-R	KRA107S SOT-23 PNP
IC41 IC44 IC58	H03-TSUPA672TNH-R	TRANSISTOR MOSFET N-CHANNEL UPA672T-T1-A SMD
IC10	H03-ICIL1117SDG-R	IC LOW DROP REGULATOR IL1117S-1.8 1.8V SOT-223
IC48	H03-ICK4S6432I6-R	IC 64M SDRAM K4S643232H-UC60/70 64Mb H-die (x32) SDRAM
IC67 IC68	H03-ICC1G125DCK-R	IC SINGLE BUS BUFFER GATE SN74LVC1G125DCKT SOT(SC-70)DCKT
Resistors		
R191 R192	RS1AD0750NA-R	RES CHIP 75OHM 1% 1/16W 0603
R153	RS1AD1691NA-R	RES CHIP 1K69 ohm 1/16W 1% 0603
R318	RS1AD1870NA-R	RES CHIP 187 OHM 1/16W 1% 0603
R288 R291 R294 R298 R301 R302 R304 R357	RS3AD0000NA-R	RES CHIP, 0 R 1/16W +/-5%, 0603
R358 R359	RS3AD0101NA-R	RES CHIP,100R 1/16W +/-5%,0603
R251 R255 R258 R371	RS3AD0102NA-R	RES CHIP,1K 1/16W +/-5% ,0603
R164 R223 R224 R225 R308 R309	RS3AD0103NA-R	RES CHIP,10K 1/16W +/-5% ,0603
R173 R174 R317 R334	RS3AD0105NA-R	RES CHIP 1M 1/16W +5% 0603
R230 R231	RS3AD010ANA-R	RES CHIP,1R 1/16W +/-5%,0603
R126	RS3AD0123NA-R	RES CHIP,12K 1/16W +/-5%,0603
R165	RS3AD0152NA-R	RMGCFMIC 1K5 OHM +5% 0603
R252 R253 R256 R259	RS3AD0153NA-R	RES CHIP,15K 1/16W,+/-5%,0603.
R339	RS3AD0201NA-R	RES.CHIP,200 1/16W +-5%,0603.
R261 R263 R397	RS3AD0222NA-R	RMGCFMIC 2K2 OHM +5% 0603
R151 R152	RS3AD0272NA-R	RMGCFMIC 2K7 OHM +5% 0603
R368	RS3AD0302NA-R	RMGCFMIC 3K0 OHM +5% 0603
R335	RS3AD0330NA-R	RMGCFMIC 33R0 OHM +5% 0603
R260 R262 R396	RS3AD0333NA-R	RMGCFMIC 33K0 OHM +5% 0603
R369	RS3AD0390NA-R	RES,CHIP 39 OHM 1/16W +/-5% 0603
R206 R336 R394	RS3AD0470NA-R	RMGCFMIC 47R0 OHM +5% 0603

Ref. Designator	Part Number	Description
VIDEO PCB		
R208 R282 R283 R319 R333 R345 R346 R381 R382	RS3AD0472NA-R	RES CHIP,4K7 1/16W +/-5%,0603
R400 R401 R402 R403	RS3AD0473NA-R	RES CHIP,47K 1/16W +/-5%,0603
R247 R250	RS3AD0680NA-R	RMGCFMIC 68R0 OHM +5% 0603
R370	RS3AD0681NA-R	RES CHIP,680R 1/16W +/-5%,0603
R163	RS3AD0682NA-R	RMGCFMIC 6K8 OHM +5% 0603
R254 R257	RS3AD0752NA-R	RES CHIP 7.5K,1/16W,+-5%,0603.
R391	RS3AD0822NA-R	RMGCFMIC 8K2 OHM +5% 0603
RV16 RV17 RV18 RV19 RV20 RV21 RV22 RV23	H03-VR0402V275R-R	VARISTOR CHIP CT0402V275RFG 16V
RV10 RV11 RV12 RV13 RV14 RV15	H03-VR0603V150R-R	VARISTOR CHIP CT0603V150RFG
RA30 RA31 RA32	RN3AY0220NA-R	RES NETWORK RCA 22OHM 1/16W 5% CN34JT220
R100 R101 R102 R103 R105 R106 R107 R108 R109 R110 R111 R189 R190 R217 R218 R219 R233 R237 R238 R239 R240 R241 R242 R243 R244 R245 R246 R267 R268 R269 R270 R271 R272 R273 R274 R275 R277 R278 R279 R324 R325 R326 R327 R328 R329 R383 R384 R385 R386 R387 R388	RS1AD0750NA-R	RES CHIP 75OHM 1% 1/16W 0603
R332	RS1AD4750NA-R	RES.CHIP 475 OHM 1/16W +/-1% 0603
R104 R209 R210 R211 R232 R234 R235 R236	RS1AD787ANA-R	RES CHIP 78.7 ohm 1/16W 1% 0603
R181 R286 R292 R296 R355 R367	RS3AD0000NA-R	RES CHIP, 0 R 1/16W +/-5%, 0603
R406	RS3AD0100NA-R	RMGCFMIC 10R0 OHM +5% 0603
R168 R177 R178 R179 R180 R322 R323 R330 R331 R340 R341 R378 R379	RS3AD0101NA-R	RES CHIP,100R 1/16W +/-5%,0603
R123 R124 R125 R127 R128 R129 R131 R132 R133 R135 R136 R137 R139 R140 R141 R160 R161 R170 R171 R172 R347 R351	RS3AD0102NA-R	RES CHIP,1K 1/16W +/-5% ,0603
R144 R145 R146 R159 R169 R212 R213 R214 R220 R221 R222 R310 R311 R312 R313 R314 R315 R316 R321 R342 R349 R350 R353 R354 R360 R361 R398	RS3AD0103NA-R	RES CHIP,10K 1/16W +/-5% ,0603
R154 R155	RS3AD0105NA-R	RES CHIP 1M 1/16W +5% 0603
R112 R113 R114 R115 R116 R117 R118 R119 R120 R121 R122 R147 R148 R157 R158 R184 R185 R215 R216 R226 R227 R228 R229 R264 R265 R266 R276 R389 R390	RS3AD010ANA-R	RES CHIP,1R 1/16W +/-5%,0603
R162 R187 R188	RS3AD0121NA-R	RMGCFMIC 120R0 OHM +5% 0603
R130 R134 R138 R142	RS3AD0123NA-R	RES CHIP,12K 1/16W +/-5%,0603
R167	RS3AD0124NA-R	RES CHIP,120K 1/16W +/-5%,0603
R150	RS3AD0154NA-R	RMGCFMIC 150K0 OHM +5% 0603
R343 R344	RS3AD0182NA-R	RES CHIP,1.8K,1/16W,+-5%,0603.
R248	RS3AD0222NA-R	RMGCFMIC 2K2 OHM +5% 0603
R348 R352	RS3AD0223NA-R	RES CHIP,22K 1/16W +/-5%,0603
R166	RS3AD0224NA-R	RES CHIP,220K 1/16W +/-5%,0603
R149	RS3AD0271NA-R	RMGCFMIC 270R0 OHM +5% 0603
R186 R372 R373 R374 R375 R376 R377	RS3AD0301NA-R	RES,CHIP 300 OHM 1/16W +/-5% 0603
R365	RS3AD0302NA-R	RMGCFMIC 3K0 OHM +5% 0603
R407 R408	RS3AD0330NA-R	RMGCFMIC 33R0 OHM +5% 0603
R249	RS3AD0333NA-R	RMGCFMIC 33K0 OHM +5% 0603

Ref. Designator	Part Number	Description
VIDEO PCB		
R182 R183 R207 R320 R362 R380 R409 R410	RS3AD0470NA-R	RMGCFMIC 47R0 OHM +5% 0603
R175 R176 R280 R281 R284 R285 R337 R338 R364	RS3AD0472NA-R	RES CHIP,4K7 1/16W +/-5%,0603
R156	RS3AD0624NA-R	RES,CHIP 620K 1/16W +/-5% 0603
R395	RS3AD0680NA-R	RMGCFMIC 68R0 OHM +5% 0603
R392 R411	RS3AD0682NA-R	RMGCFMIC 6K8 OHM +5% 0603
R404 R405	RS3AD068ANA-R	RES, CHIP, 6.8 OHM 1/16W, +/-5% 0603
R143	RS3AD0822NA-R	RMGCFMIC 8K2 OHM +5% 0603
RA10 RA11 RA12 RA13 RA16 RA17 RA18 RA19 RA22 RA33 RA34 RA35 RA36 RA39	RS3AY0470NA-R	RES NETWORK RCA 47R0 OHM +5% 62M15W CN34JT470
Miscellaneous		
L100 L130 L131 L132 L133 L134 L135 L136 L137 L138 L139 L140 L141 L146	H03-FB1212012KF-R	FCM2012KF-121T08 120ohm 2012
L110 L112	H03-FB2012F1R5K-R	FCI2012F-1R5K 1.5UH 0805
L105 L106 L107 L108 L114 L115 L116 L118 L119 L120 L123 L124 L125 L126 L127 L128 L129 L154	H03-FB2012F3R9K-R	FCI2012F-3R9K 3.9UH 0805
L111 L113	H03-LS2012F1R8K-R	INDUCTOR COIL FCI2012F-1R8K 1.8UH 0805
L142 L143 L144 L145	H03-LS2012H9002-R	CHOKE COIL ACM2012H-900-2P
NJ17 NJ18 NJ19	H03-SOYKF457009-R	YKF45-7009
F100	H03-SWNANDC1502-R	SWITCH POLY NANOSMDC150F-2 SMD
L101 L102 L103 L121	H03-FB05B3580NN-R	BEAD AXIAL/TAP,HC3580 80.5ohm
L122	H03-LAINB0470CR-R	LF 47U0H +10% 5.8 OHM 500MI0A
L109	H03-LALNB056ACR-R	INDUCTOR COIL AL02TB5R6J 5.6UH 1.9OHM +5%
Y103	H03-OSX13M5HZ00-R	CRYSTAL 13.5MHz WOOIN
Y100	H03-OSXBE14M3AU-R	CRYSTAL 14.31818MHz WOOIN
Y101	H03-OSXBE17M7AU-R	CRYSTAL 17.734475MHz WOOIN
Y104	H03-OSXBE28M39S-R	CRYSTAL 28.322MHz 18pF HC-49/S
K100 K101 K102 K103	H03-RLL0517811A-R	RELAY D3009(1-1462033-4)
NJ16	H03-SOR12BJ12GN-R	JACK RCA 12P BJ120154JG R4 BU4 G4,GOLD COLOR
NJ10 NJ12 NJ11 NJ13 NJ14 NJ15	H03-SORA60031GN-R	JACK RCA+S-VIDEO 6P C80300312G,GOLD COLOR
P602	H03-WN04AB00000-R	CONN 2.0MM GIL-S-04P-S2L2-EF 4P
P700 P701	H03-WN04AB100WH-R	CONN WAFER 2.0MM 4P 35237-0410 WHT
N700 N701	H03-WN04SB100WH-R	CONN WAFER 2.0MM 4P 35336-0410 WHT
P604	H03-WN05AB00000-R	GIL-S-05P-S2L2-EF 5P
P601	H03-WN06AB00000-R	CONNECT 2.0mm 6P GIL-S-6P-S2L2-EF
P603	H03-WN07AD00000-R	CONNECT WAFER 2.5MM 7P 5268-07A WHT ANGLE
P702	H03-WN10AB000WH-R	CONNECT WAFER 2.0mm 10P 35237-1010 WHT
N702	H03-WN10SB100WH-R	CONNECT WAFER 2.0mm 10P 35336-1010 WHT
N611	H03-WN16AI00000-R	CONNECT 1.25MM 16P GF120-16S-LS 1.25MM 16P
P612	H03-WN18DI00001-R	GF120-18S-LS 1.25mm 18P
P605	H03-WN29AI00000-R	CONN 1.25MM 29 FE R WH GF120-29S-LS 2794 A6
Y105	H03-OSX27MSCOB0-R	CRYSTAL,27.000MHz SCO-103 25-27.000M
C540	CZJII0820BE-R	CAPACITOR CERAMIC/CHIP ,82pF 50V CH J NP0 0603
MECHANICAL ASSEMBLY		
	H03-SWA2B21PDA&-R	SW PUSH POWER SDDLB15700
	H03-TXPWMEINAB0-R	POWER TRANSFORMER AVR745 MAIN TRANS 120V 60Hz USA ONLY
	H03-TXPWMEI96B0-R	POWER TRANSFORMER AVR745EU MAIN TRANS 230V 50Hz
	H03-WF22S2605RT-R	DHCDT-22/260-P1.25-RT(5/5,10/10)
	H03-WG02SG8532A-R	WIRECONASY UNIQUE 2P 530MM UL1617 PVC DOUBLE INSULATED
	H03-WG04SB81400-R	UL1007#26 STR 140mm 2.0mm 4P WHT
	H03-WN16SI01200-R	WIRE FCC CABLE DHCDT-16/120-P1.25-ST(5/5,10/10) G2,Shield
	H03-WN18SI03600-R	WIRE FFC (CARD CABLE)DHCDT-18/360-P1.25-RT(5/5,10/10)
	H03-WN29SI02000-R	WIRE FFC (CARD CABLE)DHCDT-29/200-P1.25-ST(5/5,10/10)
	H03-ZMB01S00100-R	BKT HEADPHONE
	H03-ZMB01S02200-R	SPRING PLATE GND C5212 0.2T

Ref. Designator	Part Number	Description
MECHANICAL ASSEMBLY		
	H03-ZMC11S00200-R	AL DOOR
	H03-ZMC11S04B00-R	BKT FRAME GUIDE
	H03-ZMC11S06A00-R	SPRING STOPPER
	H03-ZMC11S07A00-R	CHASSIS FRONT
	H03-ZMC11S09A00-R	BKT FAN FRONT
	H03-ZMC11S10A00-R	BKT FAN REAR
	H03-ZMC11S12A00-R	CAP BUTTON STAND-BY
	H03-ZMC11S14A00-R	BRACKET DOOR
	H03-ZMC12S07A00-R	COVER BOTTOM
	H03-ZMC12S08B00-R	BKT TRANS BOTTOM
	H03-ZMC12S09A00-R	BKT HEATSINK
	H03-ZMC12S19A00-R	BKT AC INLET
	H03-ZMD05S16A00-R	BKT HINGE AVR7300
	H03-ZMD2701ZANI-R	BRACKET POSISTOR,METAL,AVR745
	H03-ZMD2702GAGY-R	AL PANEL FRONT,AVR745
	H03-ZMD2703GAGY-R	BADGE FRONT,AL,AVR745,GREY,HOT STAMPING
	H03-ZMD27HS0100-R	H/SINK AMP AVR745
	H03-ZMD27HS0200-R	H/SINK MAIN AVR745
	H03-ZMD27HS0300-R	HEATSINK AMP SMALL
	H03-ZMD27S02A00-R	PANEL REAR AVR745US
	H03-ZMD27S04A00-R	BKT FRAME GUIDE AVR745
	H03-ZMD27S06A00-R	BKT VIDEO
	H03-ZMD27S08A00-R	COVER TOP AVR745
	H03-ZMD27S13A00-R	CHASSIS MAIN AVR745
	H03-ZMD27S20A00-R	BADGE harman/kardon COVER TOP AVR745
	H03-ZPC1004GASG-R	BUTTON 7 KEY
	H03-ZPC1018GART-R	FILTER VFD
	H03-ZPD0315GAMW-R	VOLUMN KNOB
	H03-ZPD0316GASG-R	COVER KNOB
	H03-ZPD0317GACR-R	CAP KNOB VOLUMN
	H03-ZPD2719GABT-R	WINDOW DISPLAY AVR745+BADGE NAME AVR745
	H03-ZVC11DWT100-R	TAPE DOOR
	H03-ZVC11DWT200-R	TAPE PANEL
	H03-ZVC11GEAR01-R	DAMPER GEAR DP120
	H03-ZVJF0925S00-R	DC FAN JF0925S1M-003C651R 12V 92x92x25mm
	ZFD122062SB-R	RUBBER TOP
	ZFD122072SB-R	RUBBER TOP
	ZFNR13830SB-R	RUBBER SIDE
	ZFNR19720SB-R	RUBBER FOOT 19.7X19.7X2T BK
	ZMC12S13AYE-R	STANDOFF HEX M4X0.7 6X31.9H
	ZMC12S14AYE-R	STANDOFF HEX M4X0.7 6X61.9H
	ZNSSM4045HZ-R	NUT M4 HEXAGON CIRCULAR EXTERNAL
	ZPC1002GAGY-R	DOOR
	ZPC1003GAGY-R	BUTTON POWER
	ZPC1005GAGY-R	BUTTON 8 KEY
	ZPC1006GAWH-R	BUTTON STANDBY
	ZPC1007GAMW-R	INDICATOR STAND-BY
	ZPC1017GABK-R	HOLDER VFD
	ZPC1102GAMW-R	INDICATOR VIDEO
	ZPC1103GAGY-R	FOOT 50MM 15.8MM
	ZPD2701GAGY-R	PANEL FRONT AVR745
	ZSMCM4008BY-R	SCREW BM 4X8
	ZSMCM4010BB-R	SCREW BM 4X10
	ZSMPM3006LB-R	SCREW.M.S.M3X6 P/HD BLACK
	ZSTBM3008BY-R	SCREW ST BH 3X8
	ZSTBM3010BB-R	SCREW ST BH 3X10
	ZSTBM3012BY-R	SCREW ST BH 3X12 PIVOT
	ZSTBM3014BY-R	SCREW ST BH 3X14 PIVOT
	ZSTGM3010BB-R	SCREW ST BH 3X10 GROUND
	ZSTWM3006BB-R	SCREW ST WPH 3X6
	ZSTWM3008BY-R	SCREW ST WPH 3X8
	ZSTWM3A08BY-R	SCREW ST W7.5PH 3X8
	ZSTWM4008BC-R	SCREW ST WPH 4X8 SILVER CHROM
	ZUC1201AABK-R	SPONGE 30X30X10T BK
	ZWF793008PO-R	WASHER FIBER 3 0.8T
	ZWM623108SZ-R	WASHER SPRING 3

Ref. Designator	Part Number	Description
	ZWM763109SZ-R	AC SPRING WASHER RT2250(PAV5005)
	ZWM803305PZ-R	WASHER PLAIN 3
	ZWMC04810PZ-R	WASHER PLAIN 4
	H03-FBD0480BR00-R	FCORE CLAMP FILTER LF80BR W5 SRH 16X28X9
	H03-ZMD27S07A00-R	SHIELD AL
	H03-ZMD12S01C00-R	SHIELD DSP AVR745
	H03-ZUD0301ABBK-R	SPONGE-UL 30X30X12T BK
	H03-WG09SB82000-R	WIRE ASS'Y UL1007#26(TA) 200mm 2.0mm 9P WHT
TUNER MODULE USA ONLY	**H03-ZVC11TUNE01-R**	**TUNER MODULE KST-MB011MW0-81 USA ONLY**
TUNER MODULE EUROPE	**H03-ZVD01TUNE00-R**	**TUNER MODULE KST-MB114MW1-81 OEM EUROPE ONLY**

SCHEMATIC DIAGRAM

harman/kardon
AVR745 FRONT

REVISION RECORD		
NO.	Date	Contents

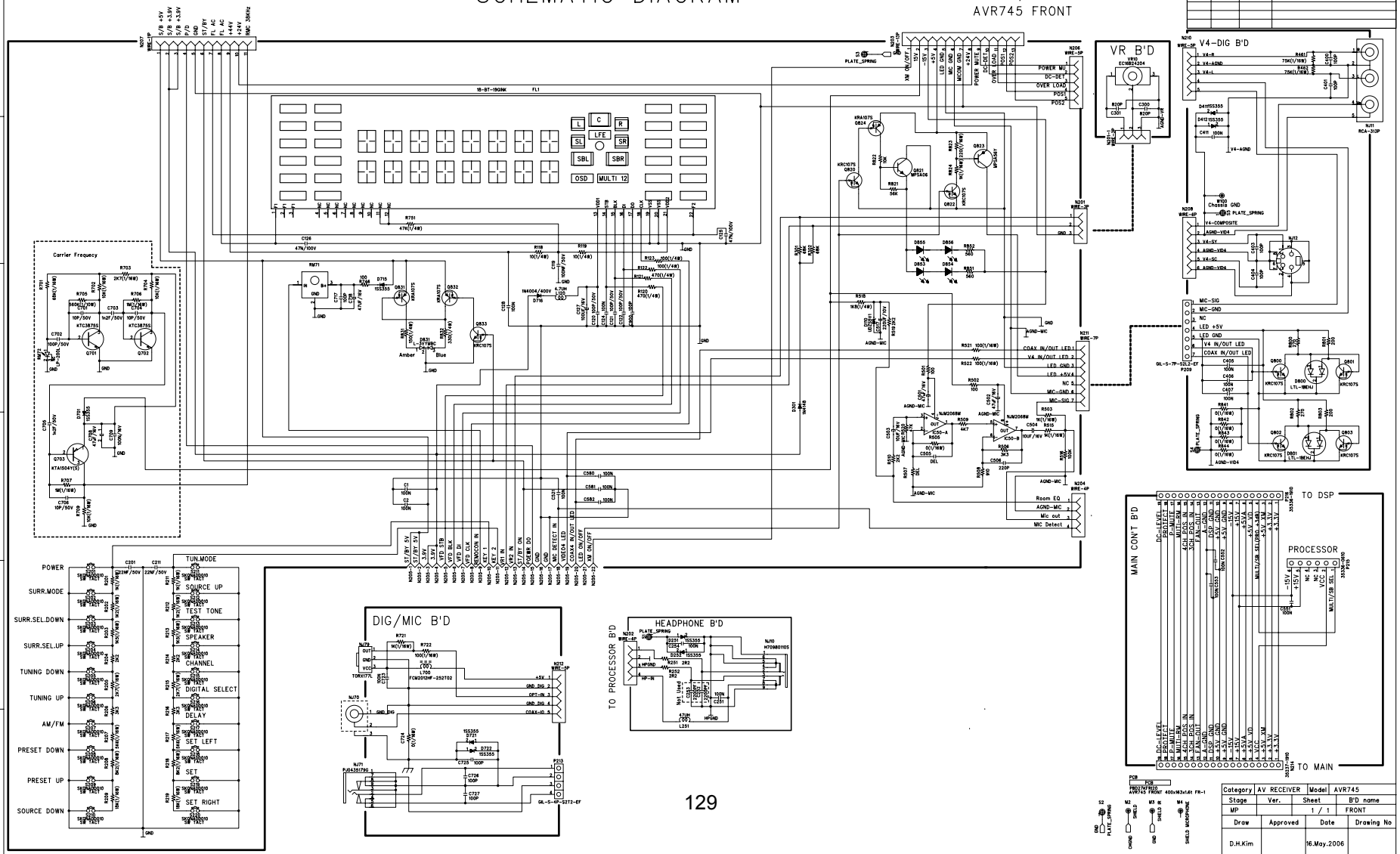

Category	AV RECEIVER	Model	AVR745
Stage	Ver.	Sheet	B'D name
MP		1 / 1	FRONT
Draw	Approved	Date	Drawing No
D.H.Kim		16.May.2006	

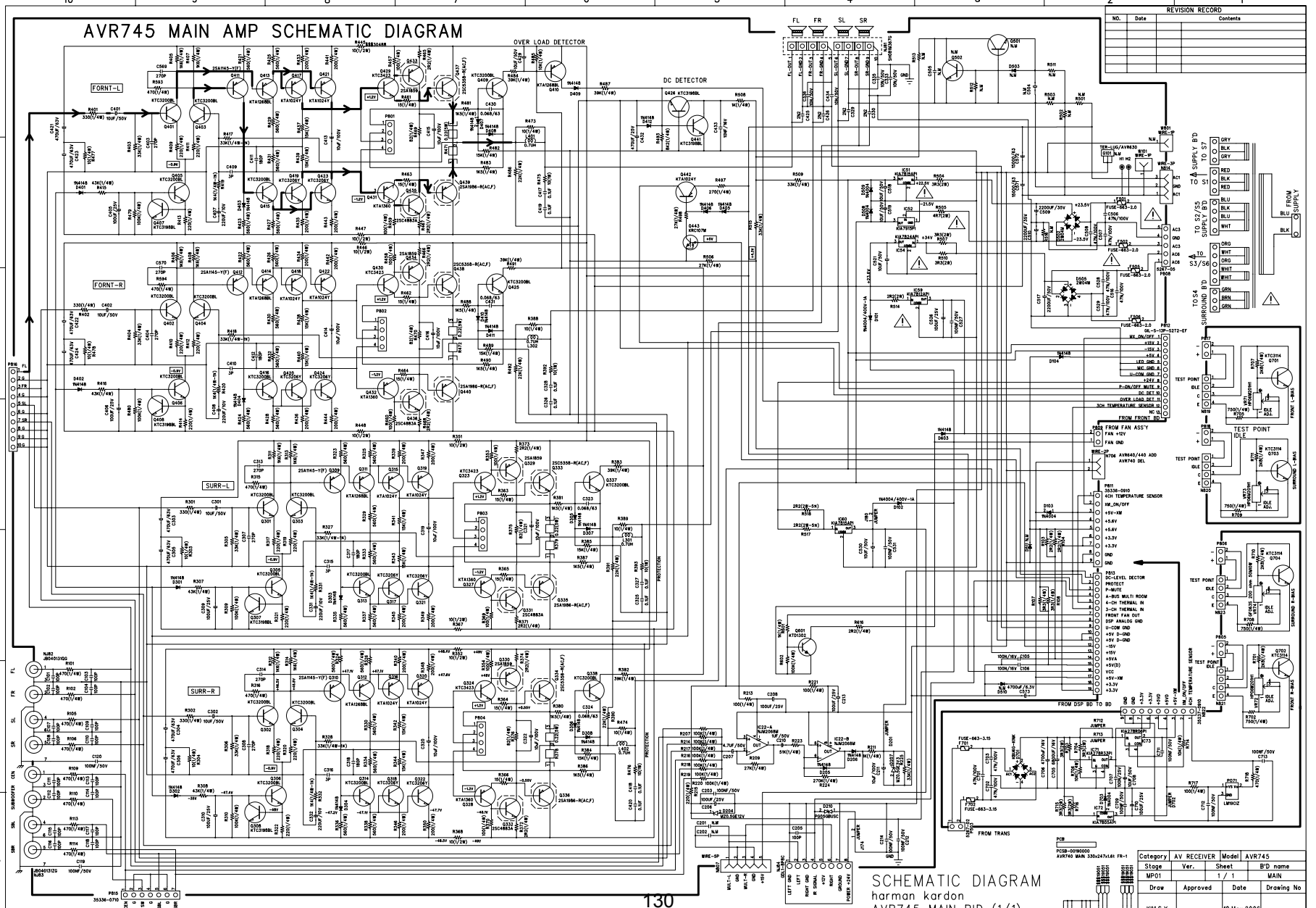
AVR745 MAIN AMP SCHEMATIC DIAGRAM
REVISION RECORD
NO. Date Contents
FRONT-L
FRONT-R
SURR-L
SURR-R
OVER LOAD DETECTOR
DC DETECTOR
FL FR SL SR
FROM FRONT BD
FROM FAN ASS'Y
FROM DSP BD TO BD
FROM TRANS
TO SUPPLY B'D
TO S7
TO S1
TO S2/S5
SUPPLY B'D
TO S3/S6
TO S4
SURROUND B'D
FROM SUPPLY
TEST POINT
IDLE
SCHEMATIC DIAGRAM
harman kardon
AVR745 MAIN B'D (1/1)
Category AV RECEIVER Model AVR745
Stage Ver. Sheet B'D name
MP01 1 / 1 MAIN
Draw Approved Date Drawing No
KIM.S.Y 18.May.2006

SCHEMATIC DIAGRAM AVR745 PROCESSOR(1/2)

harman kardon PROCESSOR B'D

REVISION RECORD		
NO.	Date	Contents

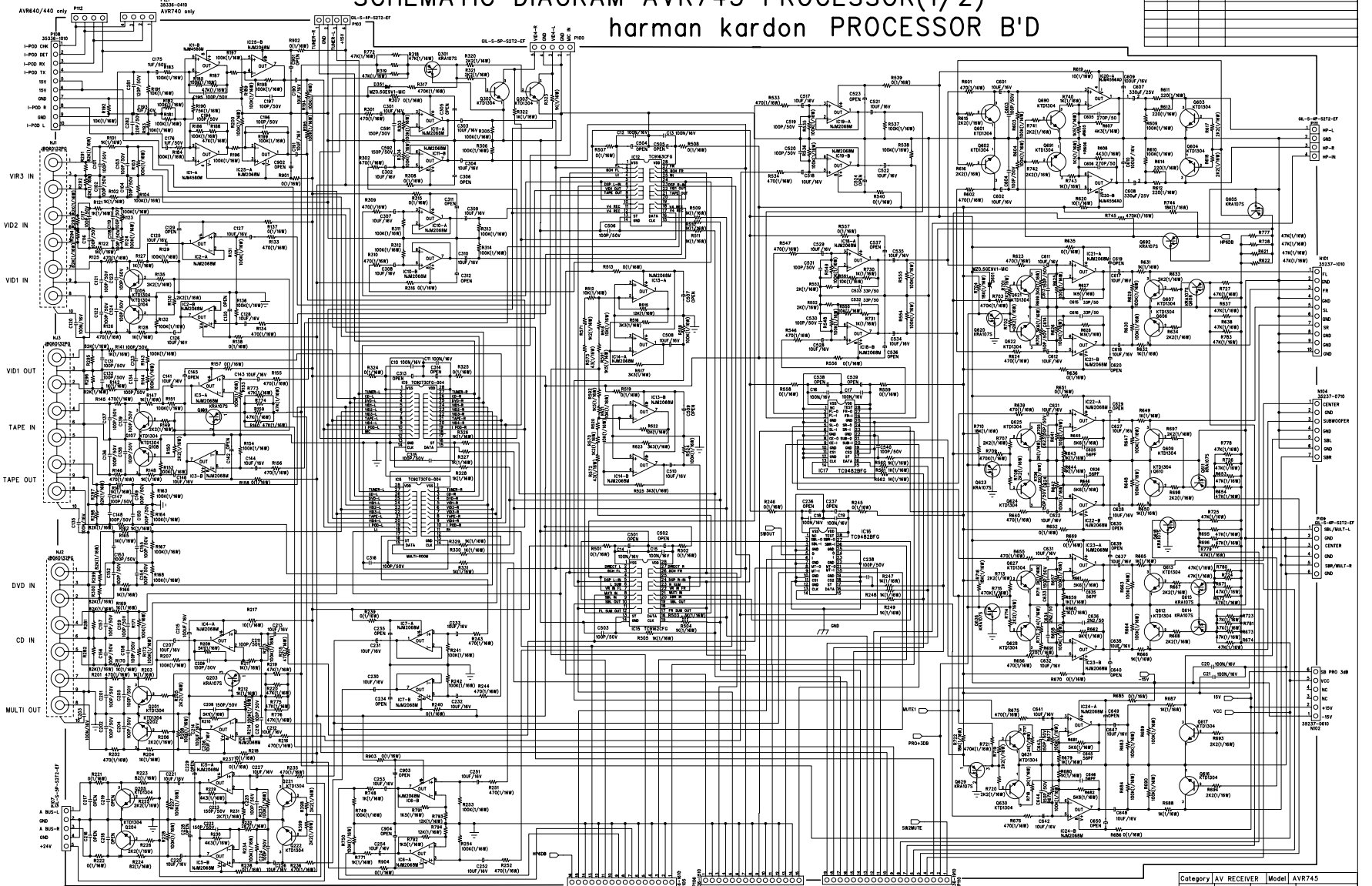

Category	AV RECEIVER	Model	AVR745
Stage	Ver.	Sheet	B'D name
MP		1 / 2	PROCESSOR
Draw	Approved	Date	Drawing No
J.S.CHOI		16.May.2006	

REVISION RECORD			
NO.	Date		Contents

SCHEMATIC DIAGRAM AVR745 PROCESSOR (2/2)
harman kardon PROCESSOR B'D

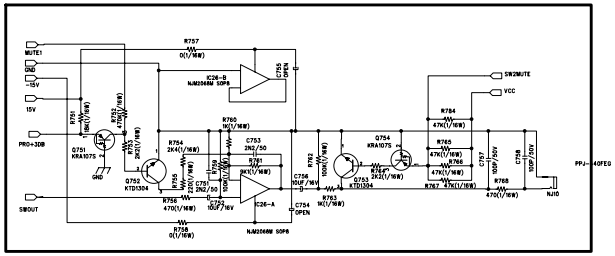

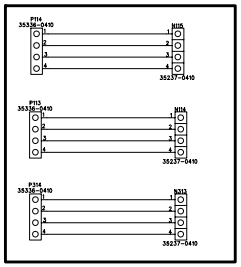

Category	AV RECEIVER	Model	AVR745
Stage	Ver.	Sheet	B'D name
MP		2 / 2	PROCESSOR

Draw	Approved	Date	Drawing No
J.S.CHOI		16.May.2006	

REVISION RECORD		
NO.	Date	Contents

AVR745 RS232 SCHEMATIC DIAGRAM

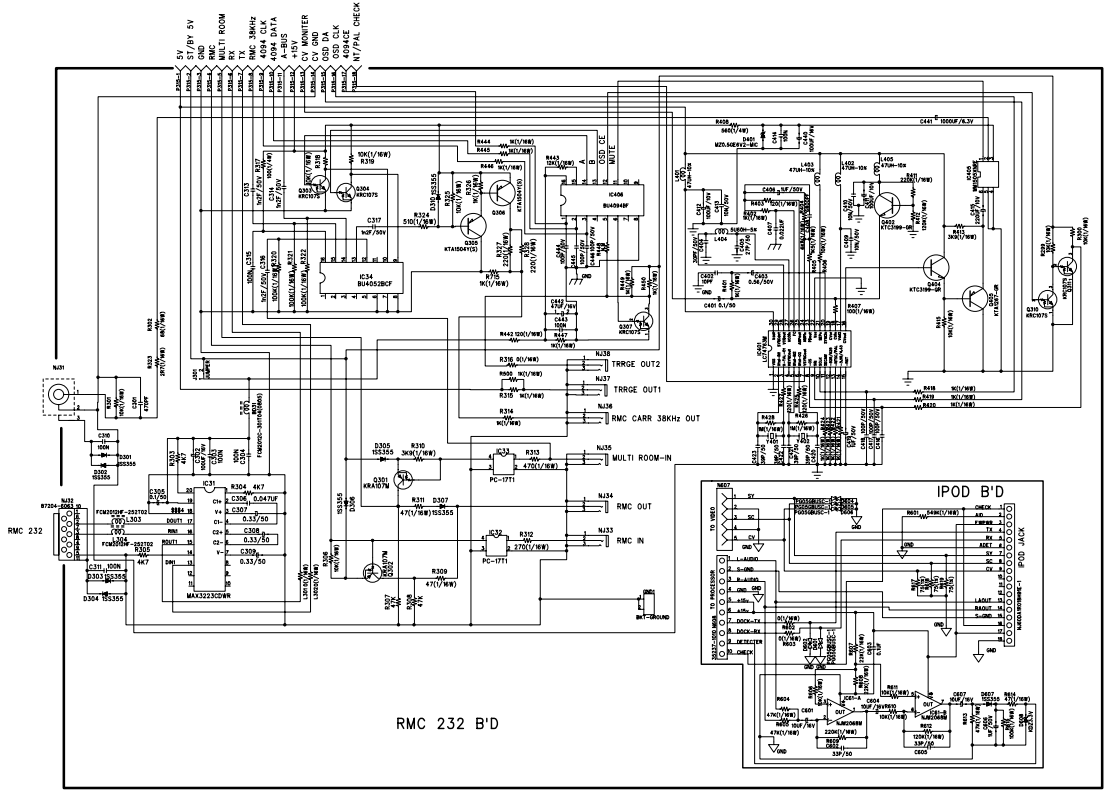

Category	AV RECEIVER	Model	AVR745
Stage	Ver.	Sheet	B'D name
MP		/	RS232
Draw	Approved	Date	Drawing No
S.Y .KIM		16.May.2006	

SCHEMATIC DIAGRAM
harman kardon
AVR745 SUPPLY

REVISION RECORD		
NO.	Date	Contents

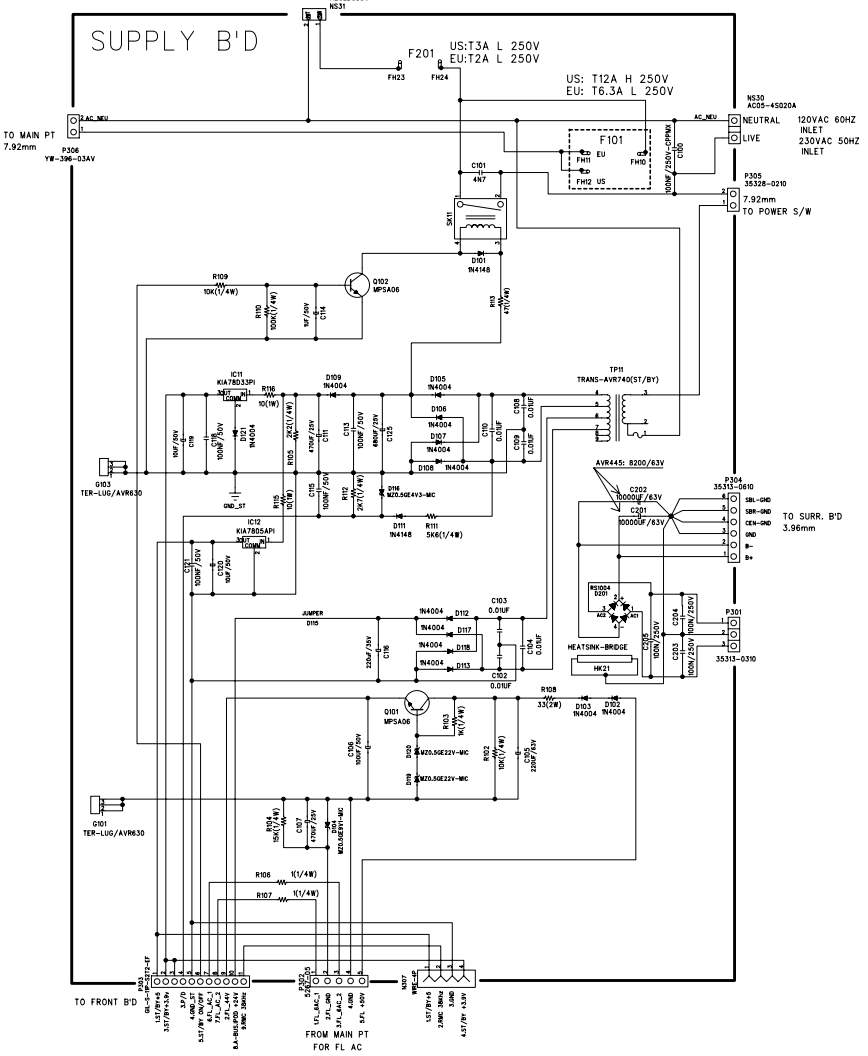

Category	AV RECEIVER	Model	AVR745
Stage	Ver.	Sheet	B'D name
MP01		1 / 1	SUPP/REGU
Draw	Approved	Date	Drawing No
S.Y .KIM		16.May.2006	

SCHEMATIC DIAGRAM AVR745 CENTER SB AMP B'D

harman kardon

REVISION RECORD		
NO.	Date	Contents

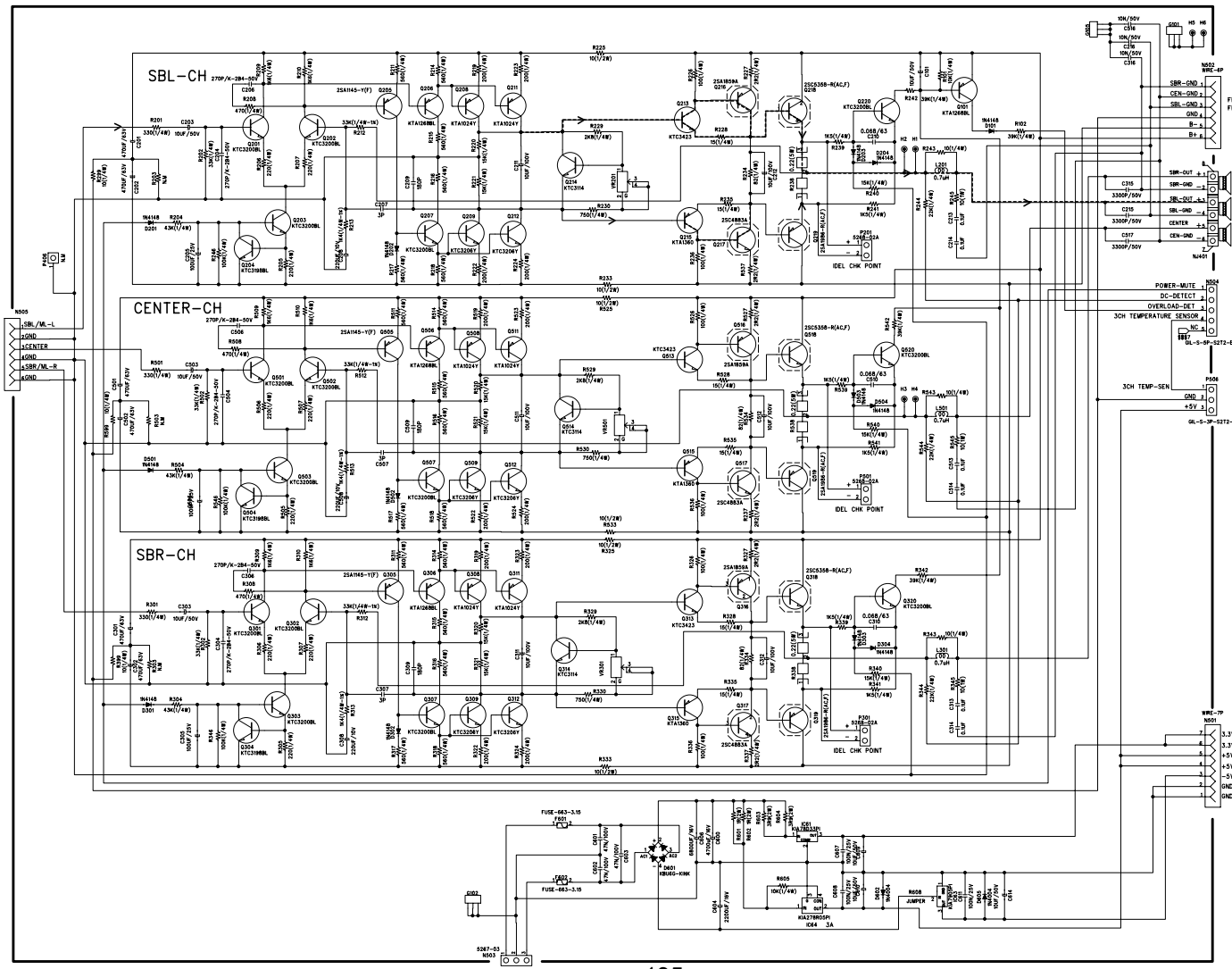

Category	AV RECEIVER	Model	AVR745
Stage	Ver.	Sheet	B'D name
MP01		1 / 1	SURROUND
Draw	Approved	Date	Drawing No
KIM.S.Y		16.May.2006	

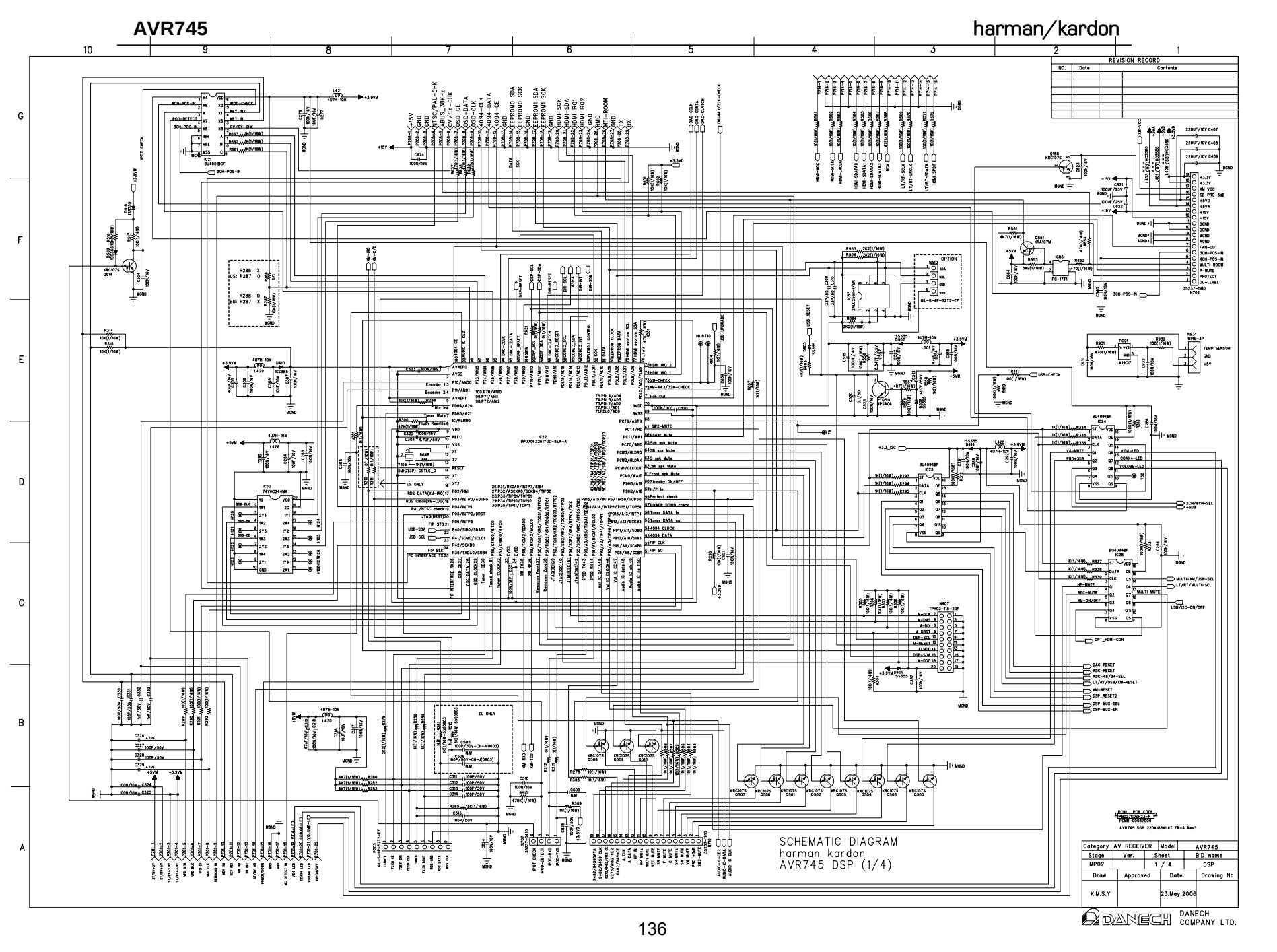
REVISION RECORD
NO. Date Contents
SCHEMATIC DIAGRAM
harman kardon
AVR745 DSP (1/4)
Category AV RECEIVER Model AVR745
Stage Ver. Sheet B'D name
MP02 1 / 4 DSP
Draw Approved Date Drawing No
KIM.S.Y 23.May.2006
DANECH COMPANY LTD.

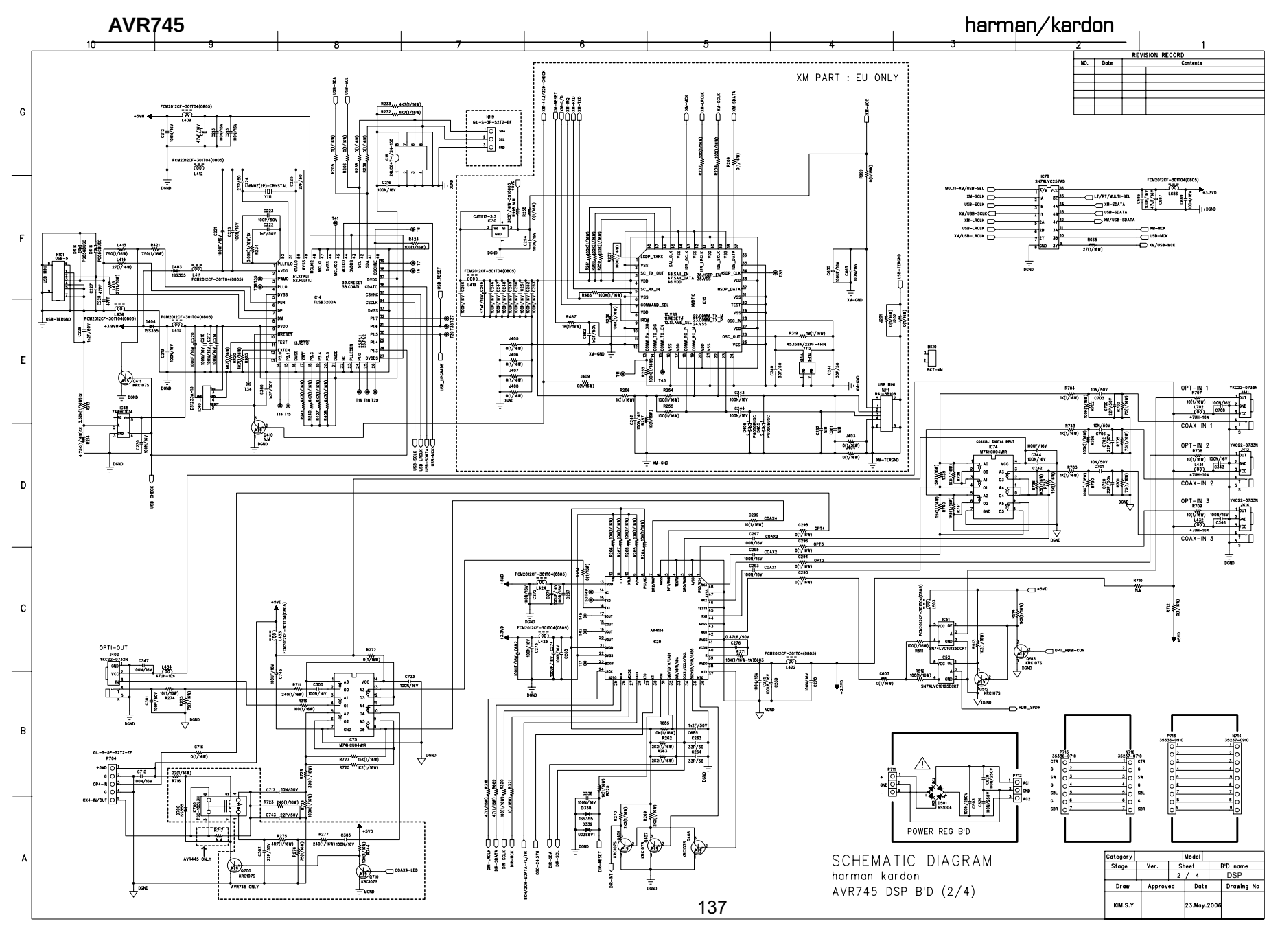
XM PART : EU ONLY
REVISION RECORD
NO. Date Contents
OPTI-OUT
COAXIAL DIGITAL INPUT
OPT-IN 1
OPT-IN 2
OPT-IN 3
COAX-IN 1
COAX-IN 2
COAX-IN 3
POWER REG B'D
SCHEMATIC DIAGRAM
harman kardon
AVR745 DSP B'D (2/4)
Category
Model
Stage
Ver.
Sheet
B'D name
2 / 4
DSP
Draw
Approved
Date
Drawing No
KIM.S.Y
23.May.2006

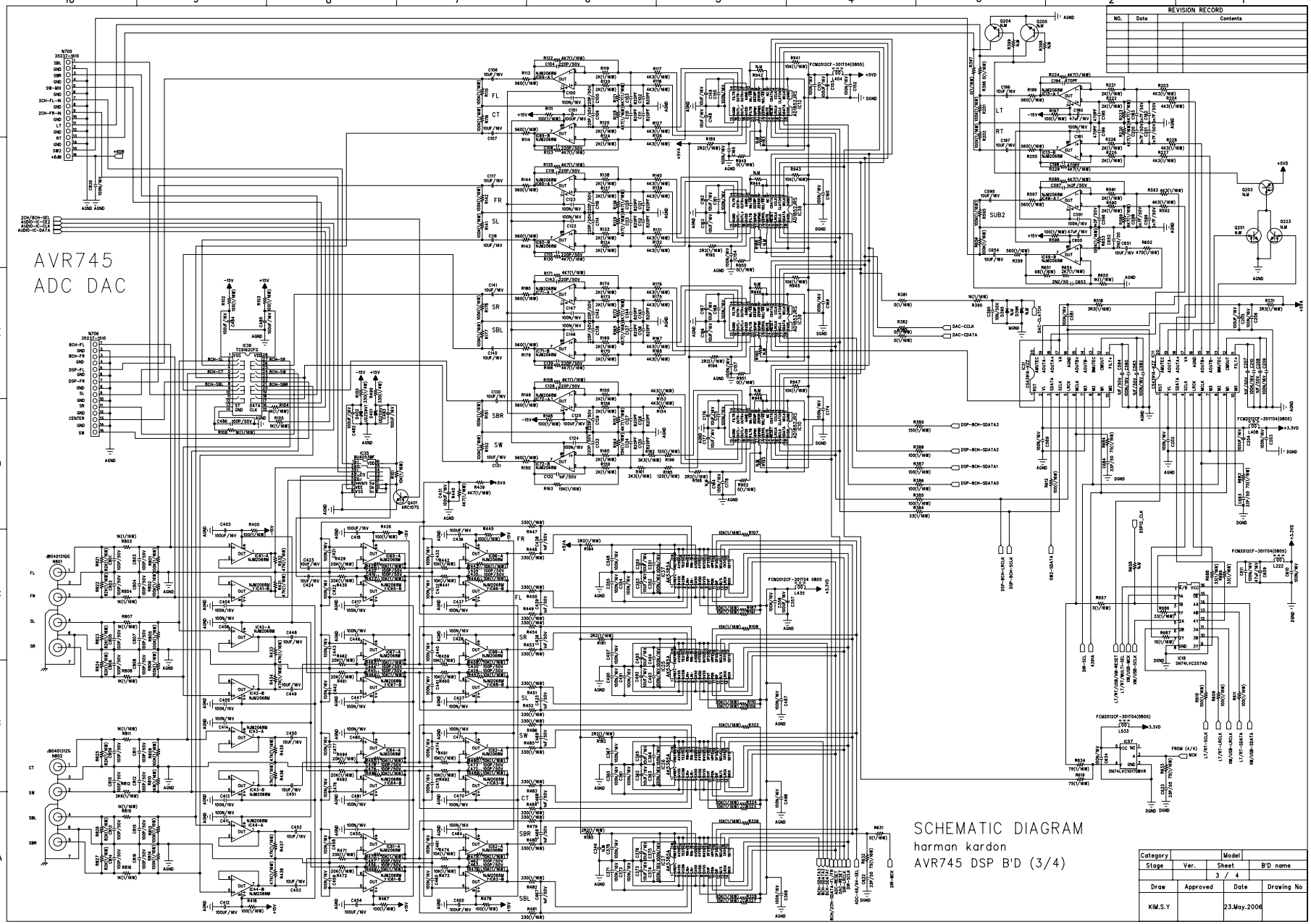
AVR745
ADC DAC
SCHEMATIC DIAGRAM
harman kardon
AVR745 DSP B'D (3/4)
REVISION RECORD
NO. Date Contents
Category Model
Stage Ver. Sheet B'D name
3 / 4
Draw Approved Date Drawing No
KIM.S.Y 23.May.2006

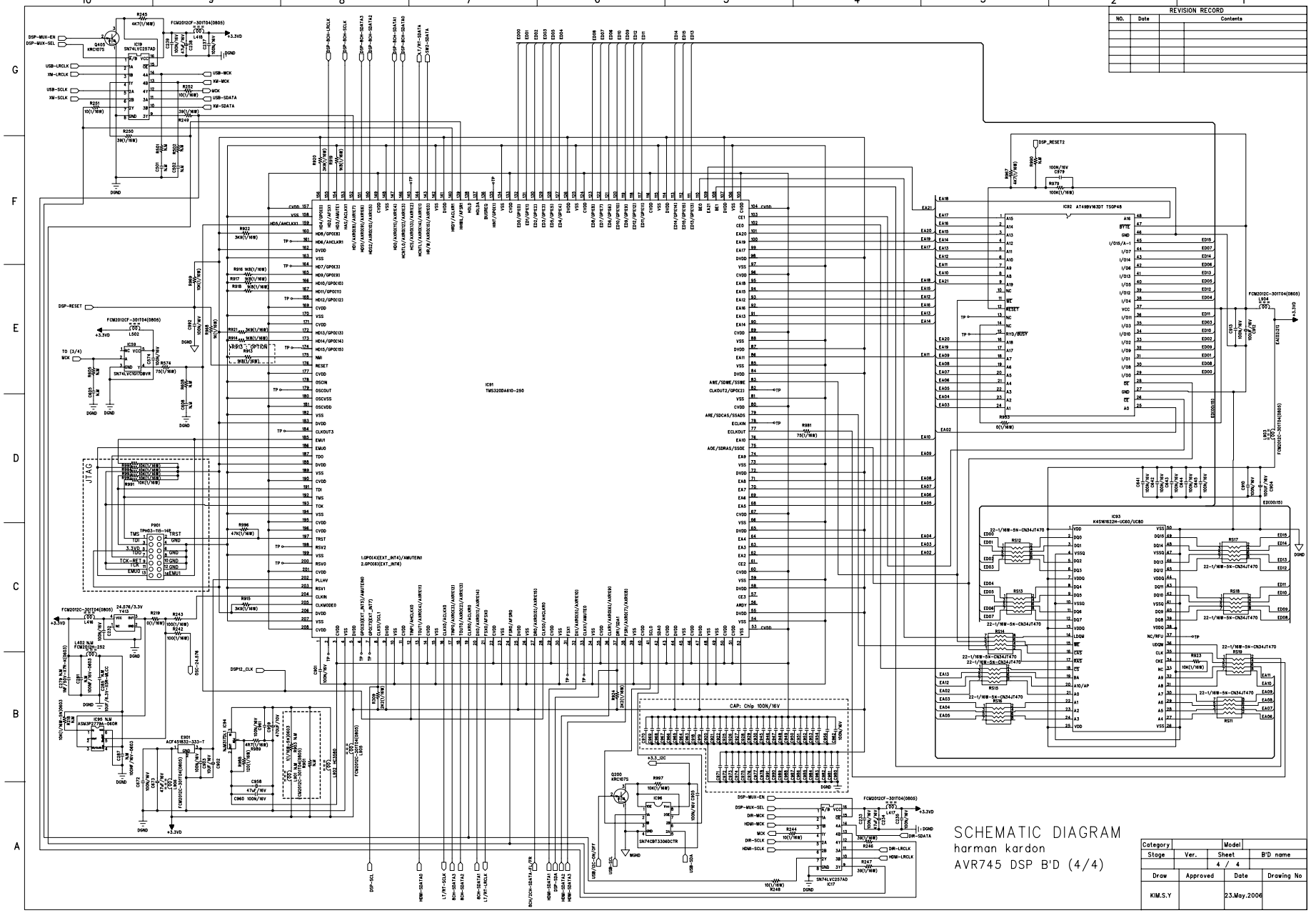
REVISION RECORD
NO. Date Contents
IC91 TMS320DA610-250
IC92 AT49BV163DT TSOP48
IC93 K4S161622H-UC60/UC80
IC19 SN74LVC257AD
IC96 SN74CBT3306DCTR
IC17 SN74LVC257AD
IC59 SN74LVC1G17DBVR
Q405 KRC107S
Q200 KRC107S
JTAG
CAP: Chip 100N/16V
SCHEMATIC DIAGRAM
harman kardon
AVR745 DSP B'D (4/4)
Category
Model
Stage
Ver.
Sheet
B'D name
4 / 4
Draw
Approved
Date
Drawing No
KIM.S.Y
23.May.2006

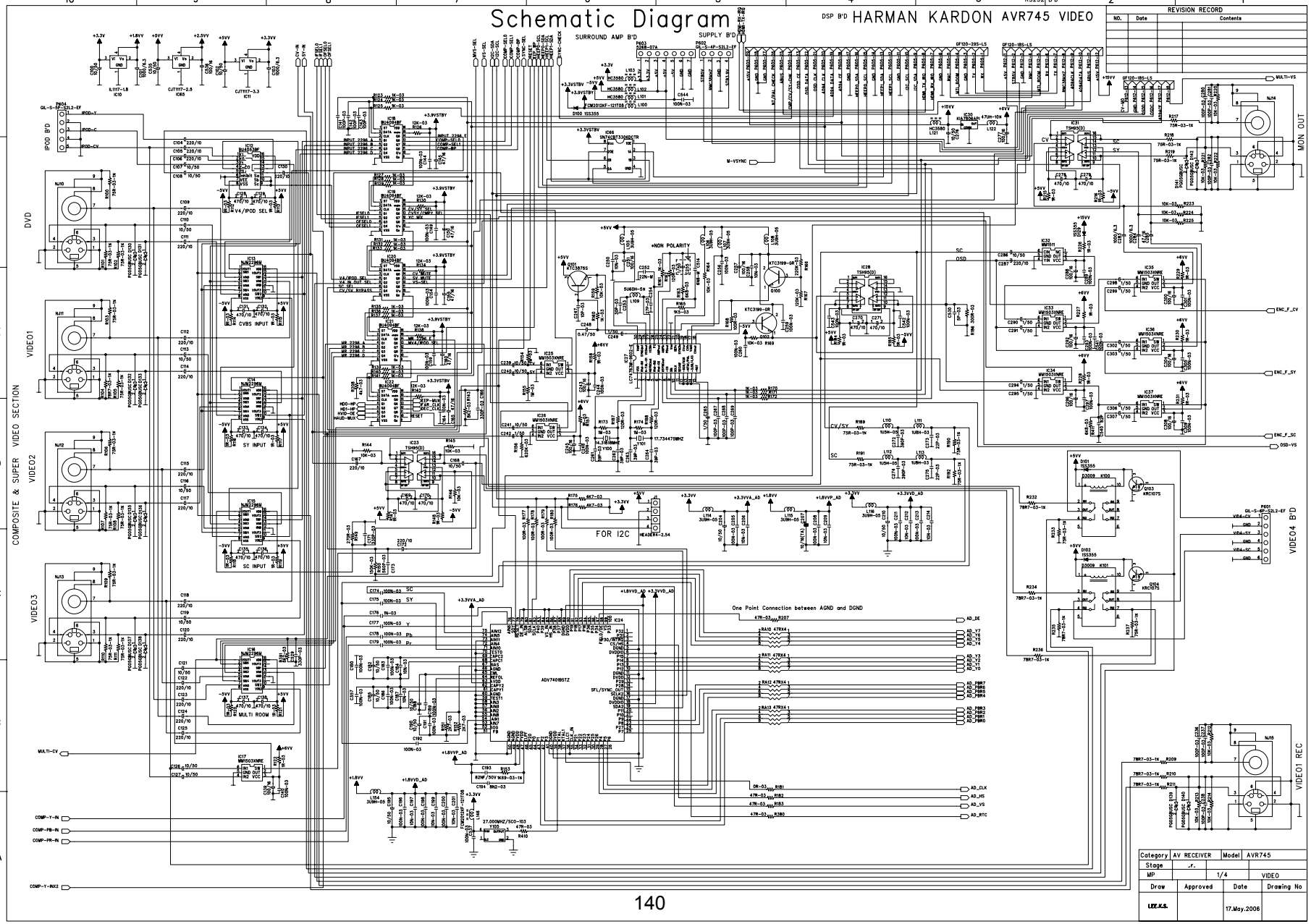
Schematic Diagram
DSP B'D HARMAN KARDON AVR745 VIDEO
REVISION RECORD
NO. Date Contents
SURROUND AMP B'D
SUPPLY B'D
IPOD B'D
DVD
VIDEO1
VIDEO2
VIDEO3
COMPOSITE & SUPER VIDEO SECTION
MON OUT
VIDEO4 B'D
VIDEO1 REC
FOR I2C
One Point Connection between AGND and DGND
CVBS INPUT
SY INPUT
SC INPUT
MULTI ROOM
V4/IPOD SEL
NON POLARITY
ADV7401BSTZ
Category AV RECEIVER Model AVR745
Stage .r.
MP 1/4 VIDEO
Draw Approved Date Drawing No
I.F.F.K.S. 17.May.2006

Schematic Diagram

HARMAN KARDON
AVR745 VIDEO

REVISION RECORD		
NO.	Date	Contents

COMPONENT VIDEO SECTION
COMP3-IN
COMP2-IN
COMP1-IN
MON.-OUT

SYNC DETECTOR CIRCUIT
SYNC DETECTOR CIRCUIT

Category	AV RECEIVER	Model	AVR745
Stage	.r.		
MP	2/4		VIDEO
Draw	Approved	Date	Drawing No
LEE.K.S.		17.May.2006	

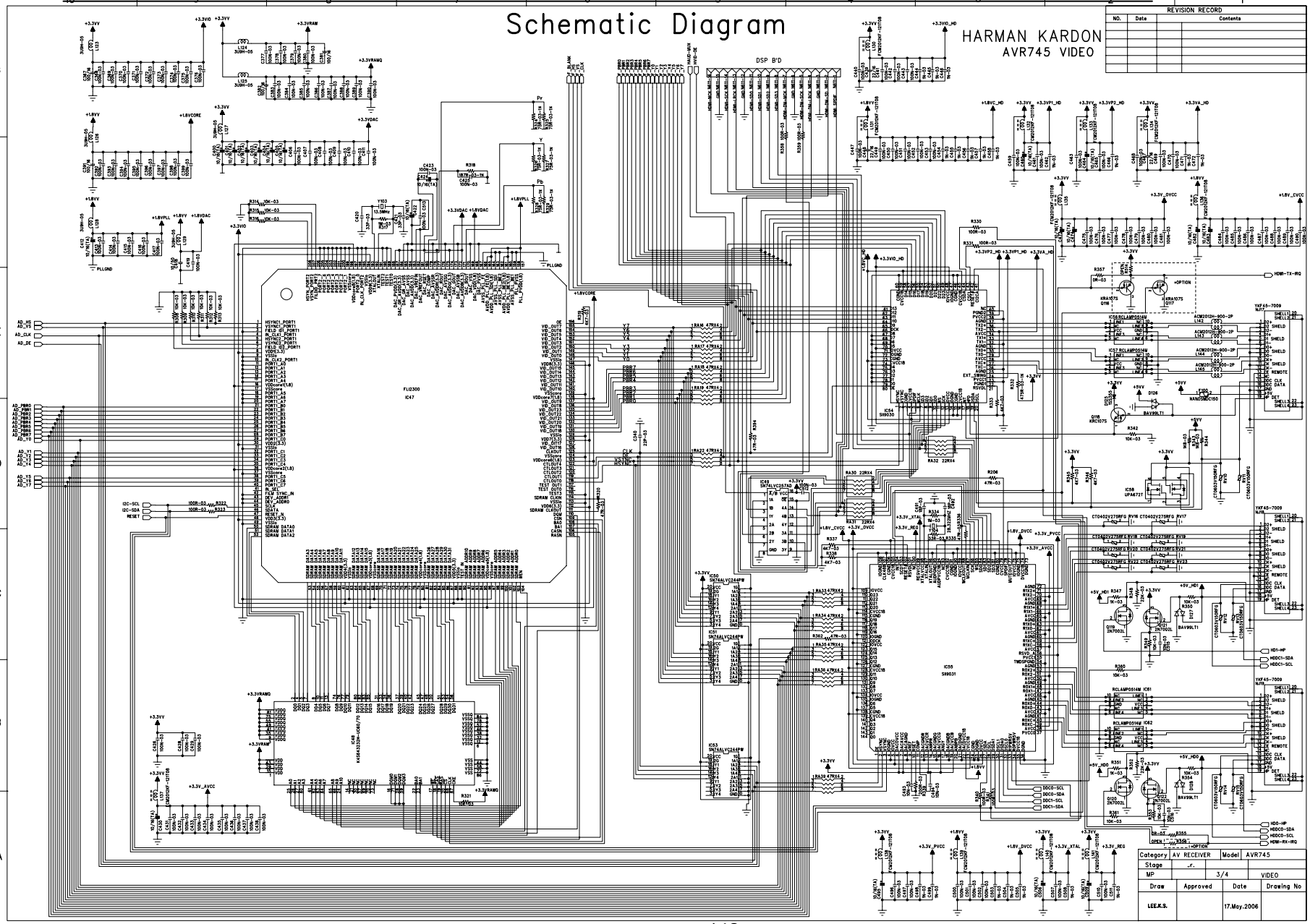
Schematic Diagram
HARMAN KARDON
AVR745 VIDEO
REVISION RECORD
NO. Date Contents
DSP B'D
Category AV RECEIVER Model AVR745
Stage
MP 3/4 VIDEO
Draw Approved Date Drawing No
LEE.K.S. 17.May.2006

REVISION RECORD		
NO.	Date	Contents

Schematic Diagram

HARMAN KARDON
AVR745 VIDEO

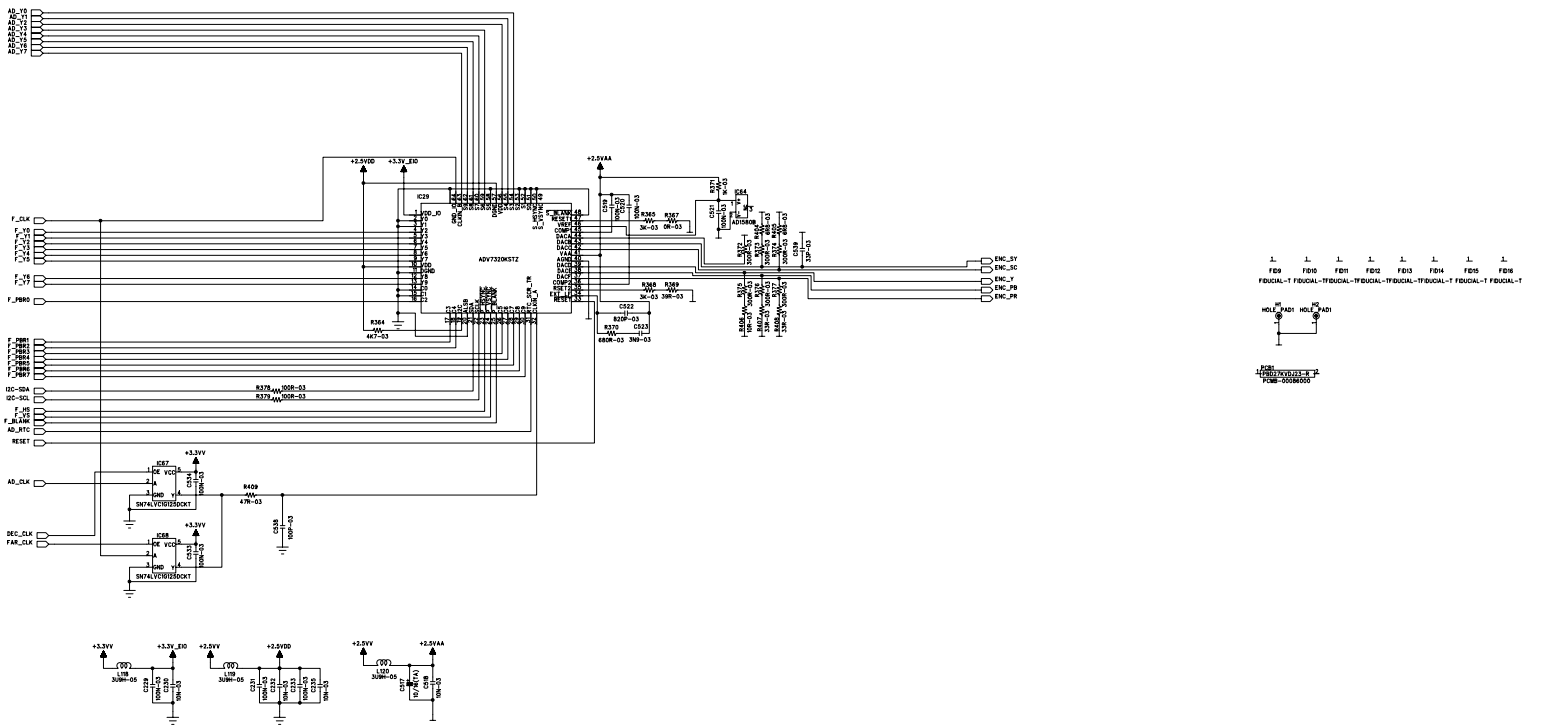

Category	AV RECEIVER	Model	AVR745
Stage	Ver.	Sheet	B'D r
MP		4/4	VIDEO
Draw	Approved	Date	Drawing No
LEE.K.S.		17.May.2006	

AVR745

harman/kardon

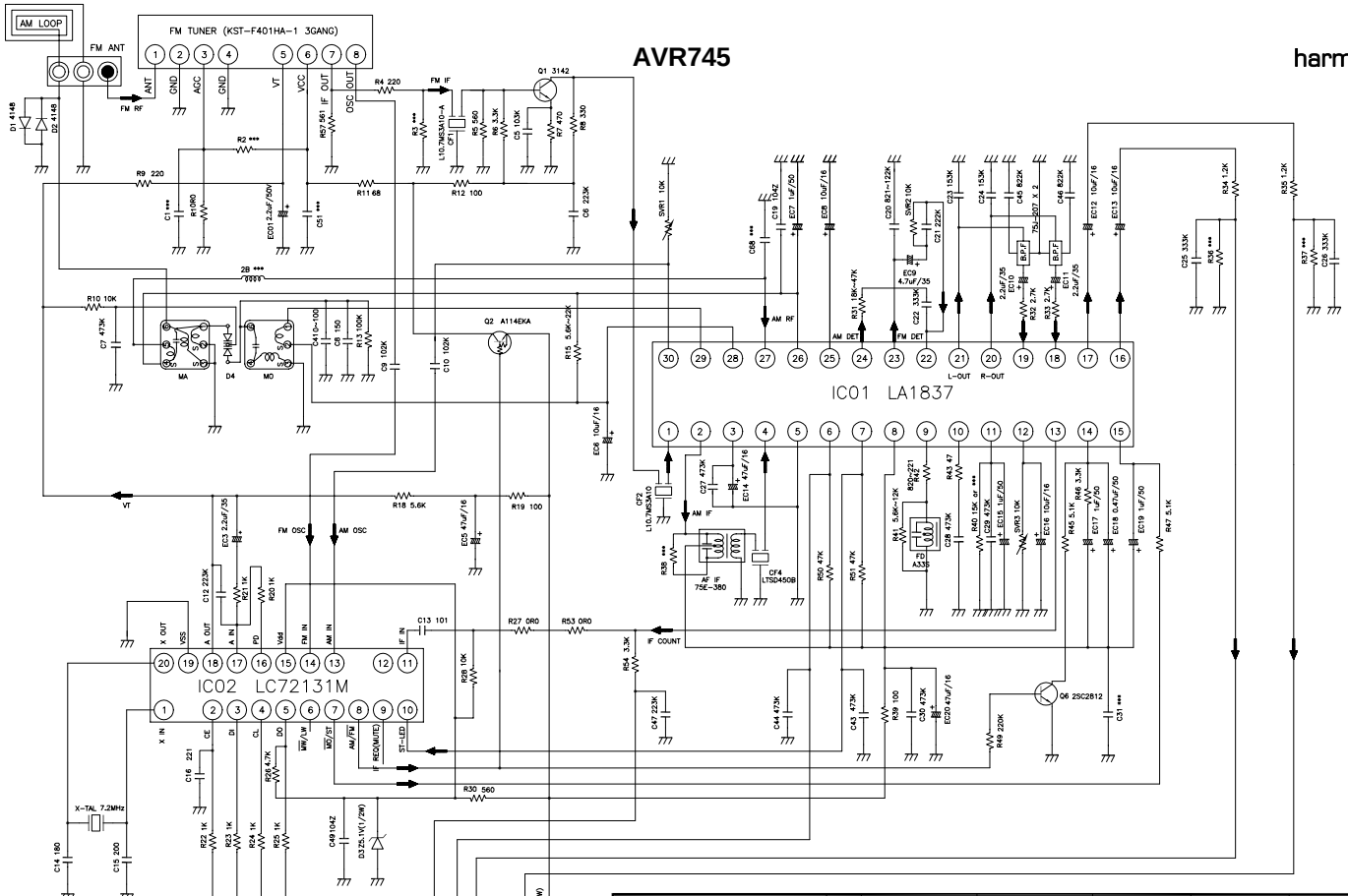

AMENDMENT						
NO	PART'S NO	PART'S NAME	MATERIAL	SIZE	TREATMENT	REMARK
MODEL NO : KST-MB011MW0 81			UNIT: mm	SCALE:		DATE: 2002.09.06
DRAWN	DESIGN	CHECKED	APPROVED	DRAW NO	KSD-M058-672	
144	2003. 05. 14			NAME	SCHEMATIC DIAGRAM	

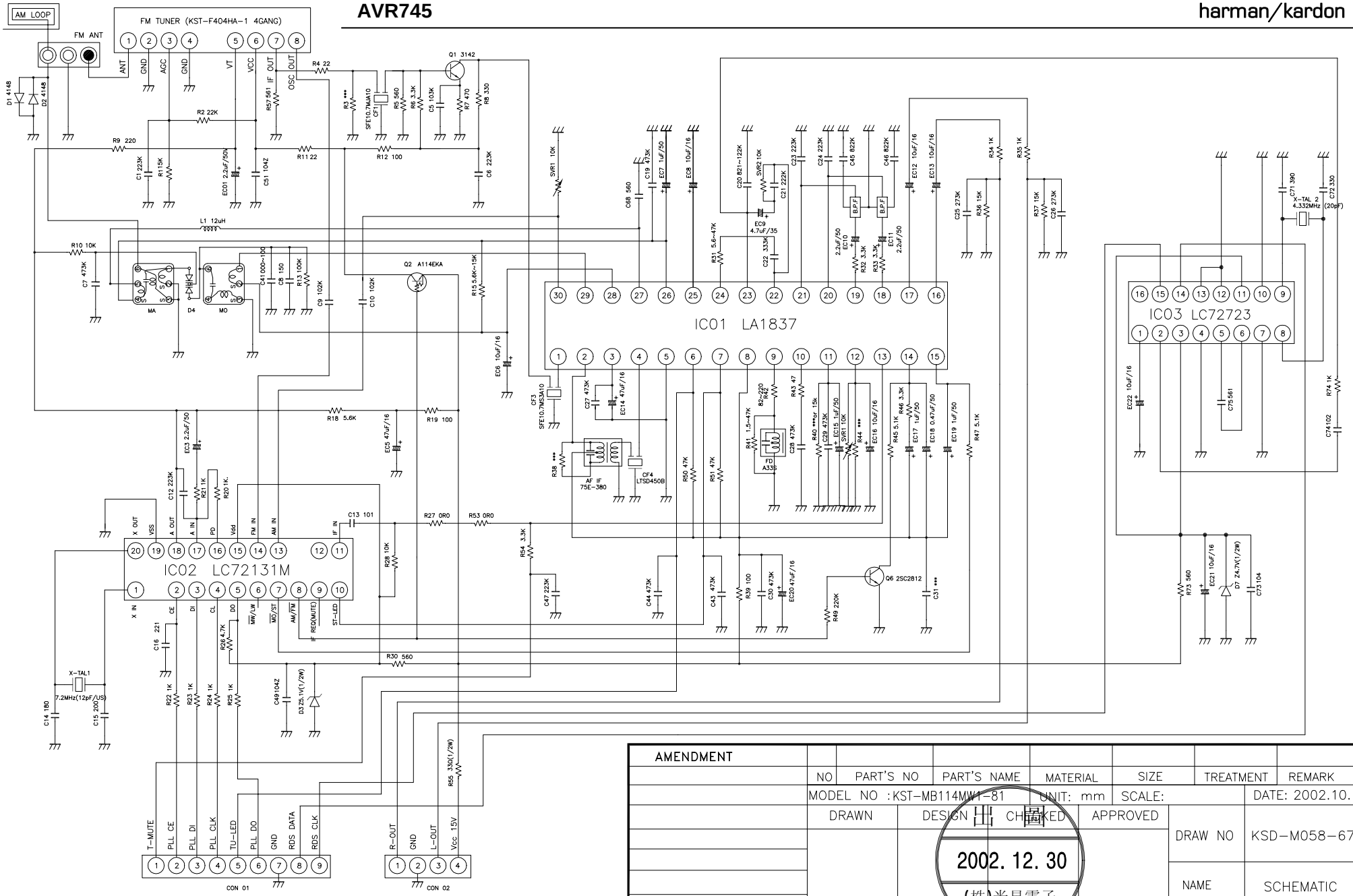

AMENDMENT	NO	PART'S NO	PART'S NAME	MATERIAL	SIZE	TREATMENT	REMARK
	MODEL NO : KST-MB114MW1-81			UNIT: mm	SCALE:		DATE: 2002.10.19
	DRAWN	DESIGN 出	CHECKED 圖	APPROVED	DRAW NO	KSD-M058-67RS	
		2002. 12. 30			NAME	SCHEMATIC DIAGRAM	
		(株)光星電子					

*Note. The Component values of this Schematic diagram are subject to change without notice for improvement.

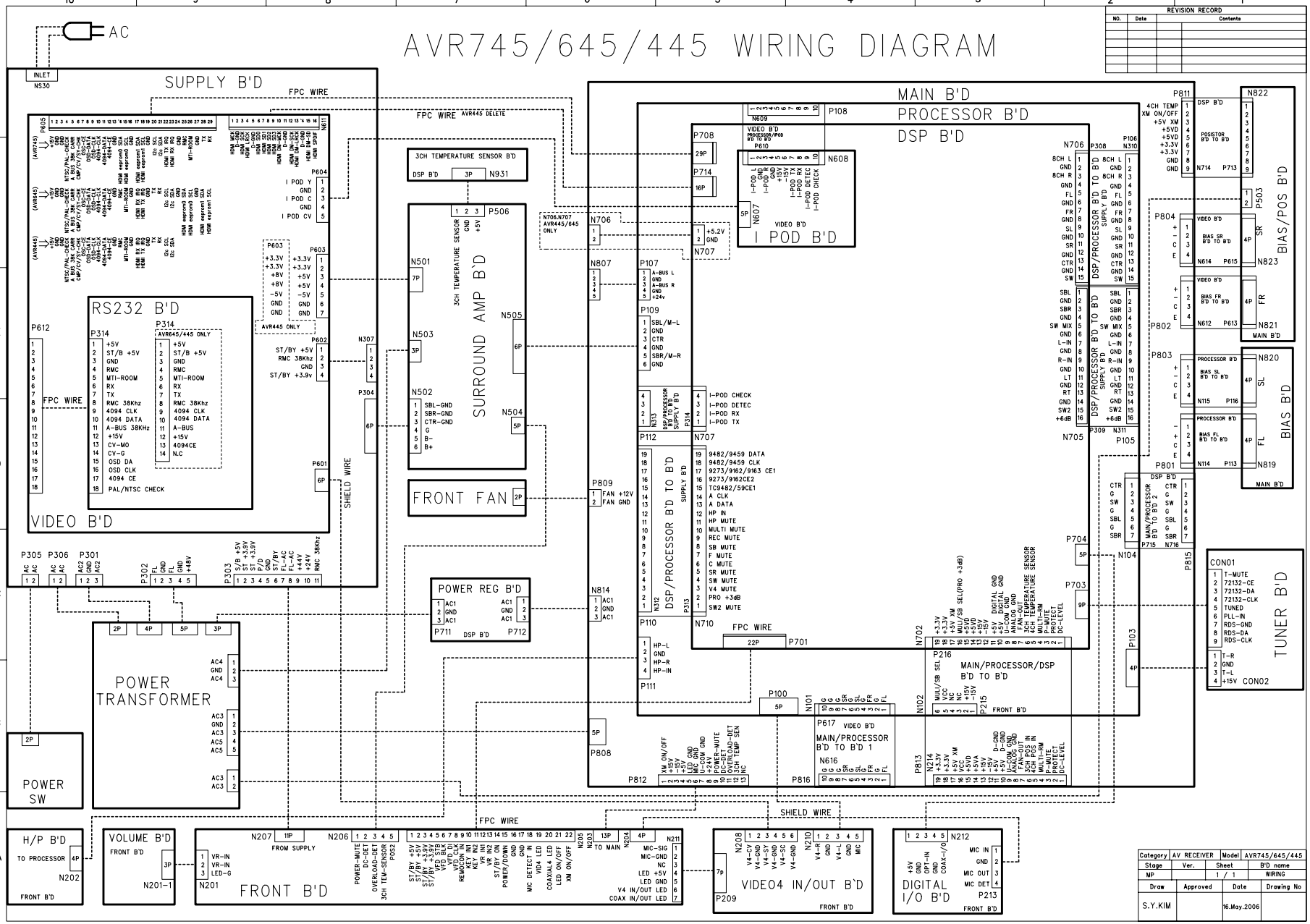
AVR745/645/445 WIRING DIAGRAM
REVISION RECORD
NO. Date Contents
AC
INLET N530
SUPPLY B'D
FPC WIRE
FPC WIRE AVR445 DELETE
RS232 B'D
VIDEO B'D
POWER TRANSFORMER
POWER SW
H/P B'D
TO PROCESSOR
FRONT B'D
VOLUME B'D
FRONT B'D
FRONT B'D
3CH TEMPERATURE SENSOR B'D
DSP B'D
N931
SURROUND AMP B'D
FRONT FAN
POWER REG B'D
DSP B'D
MAIN B'D
PROCESSOR B'D
DSP B'D
I POD B'D
VIDEO B'D
DSP/PROCESSOR B'D TO B'D
SUPPLY B'D
DSP/PROCESSOR B'D TO B'D
MAIN/PROCESSOR B'D TO B'D 1
MAIN/PROCESSOR/DSP B'D TO B'D
FRONT B'D
VIDEO4 IN/OUT B'D
FRONT B'D
DIGITAL I/O B'D
FRONT B'D
BIAS/POS B'D
BIAS FR B'D
BIAS SL B'D
BIAS FL B'D
MAIN B'D
TUNER B'D
CON01
CON02
SHIELD WIRE
SHIELD WIRE
FPC WIRE
Category AV RECEIVER Model AVR745/645/445
Stage Ver. Sheet B'D name
MP 1 / 1 WIRING
Draw Approved Date Drawing No
S.Y.KIM 16.May.2006